LANDS' END

CONGRESSIONAL PLAZA

1667 ROCKVILLE PIKE
SPACE #06
ROCKVILLE, MD 20852

ACC	ACCESSIBLE	MAT'L	MATERIAL
ACT	ACOUSTICAL CEILING TILE	MAX	MAXIMUM
ACM	ALUMINUM COMPOSITE PANEL	MDF	MEDIUM DENSITY FIBERBOARD
A/C	AIR CONDITIONING	MECH	MECHANICAL
ADA	AMERICANS WITH DISABILITIES ACT	M.E.P.	MECHANICAL, ELECTRICAL, PLUMBING
A.F.F.A.	ABOVE FINISH FLOOR	MEZZ.	MEZZANINE
AIA	AMERICAN INSTITUTE OF ARCHITECTS	MANUF.	MANUFACTURER
ALUM	ALUMINUM	MIL	MILLIMETER
ANSI	AMERICAN NATIONAL STANDARDS INSTITUTE	MIN	MINIMUM
ASHRAE	AMERICAN SOCIETY OF HEATING, REFRIGERATION & AIR CONDITIONING ENGINEERS	MIR	MIRROR
		M.S.	METAL STUD
ASSOC	ASSOCIATION	MTD	MOUNTED
ASTM	AMERICAN SOCIETY FOR TESTING & MATERIALS	MTL	METAL
ATTN	ATTENTION	(N)	NEW
B	BASE	N	NORTH
BLDG	BUILDING	N.E.C.	NATIONAL ELECTRICAL CODE
BLK(G)	BLOCK(ING)	NEMA	NATIONAL ELECTRICAL MANUF. ASSOC.
BM	BEAM	NFPA	NATIONAL FIRE PROTECTION ASSOCIATION
BMPR.	BUMPER	N.I.C.A.	NOT IN CONTRACT
B.O.	BOTTOM OF	NO.(#)	NUMBER
BW	BACKWRAP	N.T.S.B.	NOT TO SCALE
CAB	CABINET	O.C.	ON CENTER
CARG	CARRIAGE	OFI	OWNER FURNISHED ITEM
CENT	CENTER	OH	OHIO
CFO	CERTIFICATE OF OCCUPANCY	OPP	OPPOSITE
C.G.	CORNER GUARD	OSM	OWNER SUPPLIED MATERIALS
CLG	CEILING	OWSJ	OPEN WEB STEEL JOISTS
C.L.,(℄)	CENTER LINE	OZ	OUNCES
CLR	CLEAR	P	PAINT
C.M.U.	CONCRETE MASONRY UNIT	PAF	POWDER ACTUATED FASTENER
CONC	CONCRETE	PLUMB	PLUMBING
CONST	CONSTRUCTION	PLYWD	PLYWOOD
CONT	CONTINUOUS OR CONTINUE	PR	PAIR
CONTR	CONTRACTOR	PROJ	PROJECT
CT	CERAMIC TILE	P.S.I.A.	POUNDS PER SQUARE INCH
CW	CASHWRAP	Q.T.	QUARRY TILE
D	DEEP	R	RELOCATED
DEPT	DEPARTMENT	RAD	RADIUS
D.F.	DRINKING FOUNTAIN	R.C.P.	REFLECTED CEILING PLAN
DIA.(Ø)	DIAMETER	R.D.	ROOF DRAIN
DR	DOOR/DRIVE	REF	REFERENCE
DTL	DETAIL	REQ'D	REQUIRED
DWG	DRAWING(S)	REV	REVISION(S), REVISED
DRW	DRAWER	RM	ROOM
EA	EACH	R.O.	ROUGH OPENING
ELEV	ELEVATION	R.T.U.A.	ROOF TOP UNIT
ELEC	ELECTRIC(AL)	S	SOUTH
ENG	ENGINEER	SAI	SHREMSHOCK ARCHITECTS, INC.
EQ	EQUAL	SAN	SANITARY
ETC	ETCETERA	S.C.	SOLID CORE
EXT	EXTERIOR	SCH	SCHEDULE
EXT'G,(E)	EXISTING	SEI	SHREMSHOCK ENGINEERING, INC.
E.J.	EXPANSION JOINT	SHT	SHEET
FC	FLOOR COVERING	SIM	SIMILAR
F.D.	FIELD DETERMINE	SPEC	SPECIFICATION(S)
F.E.	FIRE EXTINGUISHER	SQ	SQUARE
F.E.C.A.	FIRE EXTINGUISHER CABINET	S.S.	STAINLESS STEEL
FIN	FINISH(ED)	STD	STANDARD
FL	FLOOR(ING)	STL	STEEL
FLUOR	FLUORESCENT	T.B.D.A.	TO BE DETERMINED
FR	FRAME/ FITTING ROOM	TEL	TELEPHONE
F.R.P.B.	FIBERGLASS REINFORCED PLASTIC	THK	THICK
F.R.T.C.	FIRE RETARDANT TREATED	T.O.	TOP OF
FT.(')	FEET/FOOT	TS	TUBE STEEL
GA	GAUGE	TYP	TYPICAL
G.C.	GENERAL CONTRACTOR	U.B.C.	UNIFORM BUILDING CODE
GYP.BD.	GYPSUM BOARD	UL	UNDERWRITERS LABORATORY
H	HIGH	U.N.O.	UNLESS NOTED OTHERWISE
H.B.	HOSE BIBB	VAV	VARIABLE AIR VOLUME
HDWR	HARDWARE	VCT	VINYL COMPOSITE TILE
HGT	HEIGHT	VERT	VERTICAL
H.M.	HOLLOW METAL	V.I.F.A.	VERIFY IN FIELD
HORIZ	HORIZONTAL	W	WIDE
HR	HOUR	W/	WITH
HRO	HORIZONTAL ROUGH OPENING	W/O	WITHOUT
HVAC	HEATING, VENTILATING, AIR CONDITIONING	WC-	WAINSCOT
IN.(")	INCH	WD	WOOD
INC.	INCORPORATED	WT	WEIGHT
INSUL	INSULATION, INSULATED		
INT	INTERIOR		
L	LONG		
LAM	LAMINATE		
LAV	LAVATORY		
LB.	POUND		
LL	LANDLORD		
LN	LINEAR		

OWNER
LANDS' END
2 LANDS' END LANE
DODGEVILLE, WI 53595
CONTACT: SHENA ROJEMANN
PHONE: 608-935-4249

LANDLORD
FEDERAL REALTY INVESTMENT TRUST
1626 E. JEFFERSON ST.
ROCKVILLE, MD 20852
AMY WHITACRE
TEL: 301-998-8219
AWHITACRE@FEDERALREALTY.COM

CONSULTANTS
SHREMSHOCK ARCHITECTS, INC.
7400 W. CAMPUS RD. STE 150.
NEW ALBANY, OH 43054
BRITTANI WHITE
TEL: 614-545-4550 x155

SHREMSHOCK ENGINEERING, INC.
7400 W. CAMPUS RD. STE 150.
NEW ALBANY, OH 43054
REECE PRATHER
TEL: 614-545-4550 x302

1. LANDLORD REVIEWS TENANT'S DRAWINGS FOR DESIGN ONLY, AND APPROVAL BY LANDLORD OR LANDLORD'S AGENT SHALL NOT CONSTITUTE AN IMPLICATION, REPRESENTATION, OR CERTIFICATION BY LANDLORD OR LANDLORD'S AGENT THAT EITHER SAID DRAWINGS OR TENANT'S WORK IS COMPLIANCE WITH INSURANCE AND INDEMNITY REQUIREMENTS, OR ANY LAWS, INCLUDING BUT NOT LIMITED TO CODE AND AMERICANS WITH DISABILITIES ACT.
2. PRIOR TO THE COMMENCEMENT OF CONSTRUCTION THE TENANT'S GC SHALL SET-UP A PRECONSTRUCTION MEETING WITH THE LANDLORD.
3. TENANT'S GC SHALL BE RESPONSIBLE TO PROVIDE A CERTIFICATE OF INSURANCE PRIOR TO THE COMMENCEMENT OF WORK IN ACCORDANCE WITH THE REQUIREMENTS OF THE TENANT'S LEASE.
4. A COPY OF THE BUILDING PERMIT WILL BE PROVIDED TO THE LANDLORD COMMENCEMENT OF WORK.
5. A COPY OF THE CERTIFICATE OF OCCUPANCY SHALL BE PROVIDED TO THE LANDLORD ONCE OBTAINED.
6. ANY ROOF PENETRATIONS SHALL BE DONE BY THE LANDLORD'S ROOFING CONTRACTOR AT THE TENANT'S GC'S EXPENSE.
7. ALL WINDOW FILM SHALL BE SUBMITTED TO THE LANDLORD FOR APPROVAL PRIOR TO INSTALLATION.
8. ANY REVISIONS MADE TO THESE DRAWINGS BY THE ARCHITECT, ENGINEER OR THE LOCAL JURISDICTION REVIEWING AND APPROVING SAID DRAWINGS, A COPY SHALL BE PROVIDED TO THE LANDLORD.
9. TENANT'S GC SHALL PLACE THE CONSTRUCTION DUMPSTER IN A LOCATION AS APPROVED BY THE LANDLORD. THE GC SHALL PROTECT THE ASPHALT AGAINST DAMAGE (IF APPLICABLE).
10. PRIOR TO ENTRY INTO THE ELECTRICAL ROOM OR ACCESS ONTO THE ROOF, TENANT'S GC SHALL COORDINATE WITH PROPERTY MANAGEMENT.
11. PRIOR TO PERFORMING ANY SHUTDOWNS OR TESTING ON THE SPRINKLER OR FIRE ALARM THE GC SHALL COORDINATE WITH PROPERTY MANAGEMENT.
12. THE GC SHALL USE THE LANDLORD'S SPRINKLER AND FIRE ALARM CONTRACTOR TO PERFORM ANY REQUIRED WORK TO THE LANDLORD'S SYSTEMS AT THE TENANT'S GC'S EXPENSE.
13. NOTHING CAN BE ATTACHED TO THE EXTERIOR OF THE BUILDING WITHOUT PREVIOUS APPROVAL FROM THE LANDLORD.
14. TENANT'S GC WILL BE REQUIRED TO PERFORM LOUD WORK (I.E. SAW CUTTING, ETC.) DURING OFF HOURS, IF NOISE DISTURBS THE ADJACENT TENANT DURING OPERATING HOURS.
15. NO GAS SAW CUTTING ALLOWED. ELECTRIC ONLY.
16. TENANT'S GC SHALL BE RESPONSIBLE TO KEEP THE WORK AREA FREE OF TRASH AND DEBRIS.
17. ANY SIGNAGE SHALL BE SUBMITTED AS A SEPARATE PACKAGE FOR LANDLORD REVIEW.
18. TENANT'S GC SHALL SUBMIT THE GC DEPOSIT AND W-9 PRIOR TO COMMENCEMENT OF WORK.
19. TENANT'S GC SHALL EXECUTE THE TENANT GC RULES AND REGULATIONS PRIOR TO COMMENCEMENT OF WORK.

SHEET #	SHEET TITLE	REVISIONS 1	2	3	4	5
	ARCHITECTURAL					
G1.1	TITLE SHEET	●				
G1.2	RESPONSIBILITY SCHEDULE					
G1.3	GENERAL NOTES, DOOR AND FINISH SCHEDULES	●				
AD.1	DEMOLITION/LEASE PLAN	●				
AD.2	REFLECTED CEILING DEMOLITION/LEASE PLAN					
AD.3	ABOVE CEILING DEMOLITION/LEASE PLAN					
A1.1	BARRICADE PLAN AND ELEVATION					
A2.1	CONSTRUCTION PLAN	●				
A2.2	CONSTRUCTION PLAN	●				
A3.1	REFLECTED CEILING / LIGHTING PLAN	●				
A3.2	REFLECTED CEILING / LIGHTING PLAN	●				
A5.1	FINISH PLAN	●				
A5.2	FINISH PLAN	●				
A6.1	FIXTURE/LIFE SAFETY PLAN & FIXTURE SCHEDULE	●				
A6.2	FIXTURE/LIFE SAFETY PLAN & FIXTURE SCHEDULE	●				
A7.1	INTERIOR ELEVATIONS	●				
A7.2	INTERIOR ELEVATIONS					
A8.1	STOREFRONT PLAN & ELEVATION	●				
A8.2	STOREFRONT ELEVATIONS					
A8.3	STOREFRONT SECTIONS & DETAILS	●				
A8.4	STOREFRONT DETAILS					
A10.1	DETAILS					
A10.1a	DETAILS					
A10.2	FITTING ROOM PLAN & ELEVATIONS	●				
A10.3	FITTING ROOM ELEVATIONS & DETAILS					
A10.4	DETAILS	●				
A11.1	PARTITION TYPES & DETAILS	●				
A11.2	TYPICAL FRAMING DETAILS					
A11.3	TYPICAL FRAMING DETAILS					
A11.4	NOT USED					
A11.5	FRAMING DETAILS					
A11.6	FRAMING DETAILS					
A11.7	FRAMING DETAILS					
A11.8	FRAMING DETAILS					
A12.1	FLOOR TRANSITION AND BASE DETAILS					
A13.1	TOILET ROOM PLAN, ELEVATIONS & DETAILS	●				
A14.1	STOCKROOM DETAILS					
A15.1	ARCHITECTURAL SPECIFICATIONS					
TOTAL SHEETS: 37						
	MEP					
E1.0	ELECTRICAL POWER PLAN	●				
E1.1	ELECTRICAL POWER PLAN	●				
E2.0	ELECTRICAL LIGHTING PLAN	●				
E2.1	ELECTRICAL LIGHTING PLAN	●				
E3.0	ELECTRICAL DETAILS	●				
E4.0	ELECTRICAL PANEL SCHEDULES, RISERS & DETAILS	●				
E5.0	ELECTRICAL SPECIFICATIONS					
E6.0	ENERGY COMPLIANCE FORMS	●				
M1.0	MECHANICAL PLAN AND NOTES					
M1.1	MECHANICAL PLAN AND NOTES	●				
M2.0	MECHANICAL SCHEDULES AND DETAILS					
M4.0	MECHANICAL SPECIFICATIONS	●				
TOTAL SHEETS: 12						
GRAND TOTAL: 49 SHEETS						

ABBREVIATIONS (R)

1. THIS PROJECT WILL COMPLY WITH LOCAL, STATE AND FEDERAL ACCESSIBILITY AND ENERGY CODE REQUIREMENTS.
2. THRESHOLDS SHALL BE NO HIGHER THAN 1/2" ABOVE THE TOP OF FINISHED FLOOR, EDGE TO BE BEVELED WITH A SLOPE NO GREATER THAN 1 IN 2.
3. ALONG ACCESSIBLE PATH OF TRAVEL AND AT EMERGENCY EGRESS CONDITIONS, DOOR HARDWARE SHALL BE OF THE LEVER OR PUSH TYPE, MOUNTED 34" TO 44" ABOVE FINISH FLOOR AND OPERABLE WITH A MAXIMUM EFFORT OF 5 LBS FOR INTERIOR DOORS AND 15LBS FOR EXTERIOR DOORS.
4. PROVIDE INTERNATIONAL SYMBOL OF ACCESSIBILITY SIGNAGE CENTERED AT 60" ABOVE FINISH FLOOR ON STRIKE SIDE WALL AT ACCESSIBLE FITTING ROOM DOOR(S). SYMBOL SHAPE AND CONTRASTING COLORS SHALL CONFORM WITH ALL LOCAL, STATE AND FEDERAL ACCESSIBILITY REQUIREMENTS.
5. PROVIDE ACCESSIBLE MANEUVERING CLEARANCES AT DOORS AS SHOWN ON PLANS AND IN COMPLIANCE WITH ADA, ICC A117.1 AND LOCAL CODE.
6. ACCESSIBLE DOORS MUST BE A MINIMUM 3'-0" WIDE X 6'-8" HIGH.
7. HOT WATER PIPES AND DRAIN PIPES UNDER LAVATORIES SHALL BE INSULATED AND HAVE CLEARANCES TO CONFORM WITH ALL LOCAL, STATE AND FEDERAL ACCESSIBILITY AND ENERGY CODE REQUIREMENTS.
8. CASH WRAP SHALL CONFORM TO ALL LOCAL, STATE AND FEDERAL ACCESSIBILITY AND ENERGY CODE REQUIREMENTS. SEE DETAIL SHEET A10.4 FOR CLEAR DIMENSIONS AND COUNTER HEIGHTS.
9. G.C. TO PROVIDE PORTABLE FIRE EXTINGUISHERS WITH A RATING OF NOT LESS THAN 3A/40BC WITHIN 75' OF TRAVEL DISTANCE TO ALL PORTIONS OF THE SPACE DURING CONSTRUCTION. PROVIDE FIRE EXTINGUISHER DURING ALL PHASES OF CONSTRUCTION AS REQUIRED BY FIRE DEPARTMENT INSPECTOR.
10. EVERY EXIT DOOR SHALL BE OPERABLE FROM THE INSIDE WITHOUT THE USE OF A KEY, TOOL OR SPECIAL KNOWLEDGE OR EFFORT.

OWNER / PROJECT DIRECTORY (L)

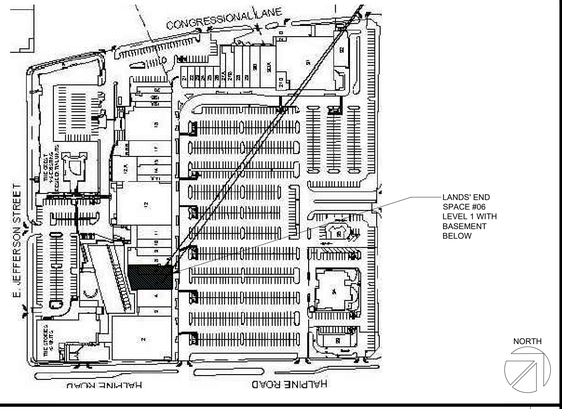

LANDLORD COMMENTS (G)

AREA CALCULATIONS:

GROSS AREA (LEASED):	8,593 SQ. FT.
GROSS AREA (CALC.):	8,571 SQ. FT.
GROSS SALES:	6,909 SQ. FT.
GROSS NON-SALES:	1,662 SQ. FT.
STOREFRONT FRONTAGE (EXTERIOR):	69 L.F.

DRAWING INDEX (C)

SCOPE OF WORK:

THIS PROJECT IS THE TENANT BUILD OUT OF AN EXISTING MERCANTILE SPACE, IN AN EXISTING EXTERIOR CENTER AND INCLUDES EXTERIOR STOREFRONT CONSTRUCTION

APPLICABLE CODES:

BUILDING CODE:	2015 IBC W/ AMENDMENTS
PLUMBING CODE:	2015 IPC W/ AMENDMENTS
ELECTRICAL CODE:	2014 NEC W/ AMENDMENTS
MECHANICAL CODE:	2015 IMC W/ AMENDMENTS
ENERGY CODE:	2015 IECC W/ AMENDMENTS
FIRE CODE	2015 NFPA 1 / 2015 NFPA 101 W/ AMENDMENTS
ACCESSIBILITY:	2010 ADA & MD ACCESSIBILITY CODE
LOCAL ORDINANCES:	-
SEISMIC CATEGORY:	B

BUILDING DESCRIPTION:

USE GROUP:	M-MERCANTILE
CONSTRUCTION TYPE:	IIB

FIRE RATINGS:

TENANT SEPARATION WALLS:	1 HR.
SALES/NON-SALES WALL:	2 HR.
CEILING:	0 HR. (TYPE 'X', CLASS 'A' MATERIALS)
COLUMNS:	0 HR.
EXIT HALLWAY:	1 HR.

OCCUPANT LOAD:

SALES AREA:	6,909/30 = 231
STOCK AREA	1662/300 = 6
TOTAL:	237

EGRESS:

EXITS REQUIRED:	2
EXITS PROVIDED:	2

PLUMBING FIXTURES:	MALE	FEMALE	UNISEX
LAVATORIES:	1	1	-
WATER CLOSETS:	1	1	-
URINALS:	-	-	-

DRINKING FOUNTAINS: "HI/LO" PROVIDED

PUBLIC ACCESS: PROVIDED

SERVICE SINK: PROVIDED

INTERIOR/EXTERIOR SIGNAGE AND SPRINKLER PLAN TO BE SUBMITTED UNDER SEPARATE COVER

ENTIRE SALES/NON-SALES AREA OF THE STORE IS TO RECEIVE AN AUTOMATIC FIRE SPRINKLER SYSTEM AS PER APPROVED FIRE PROTECTION PLANS TO BE SUBMITTED UNDER SEPARATE COVER

GENERAL INFORMATION / ACCESSIBILITY (P)

ELEVATION REFERENCE
SECTION REFERENCE
SECTION DETAIL REFERENCE
ENLARGED AREA REFERENCE
REVISION SYMBOL
DOOR IDENTIFIER
ELEVATION
COLUMN CENTER LINE

CODED NOTE
CEILING HEIGHT/FINISH SYMBOL
FINISH SYMBOL
ROOM NAME
WALL TYPE

SYMBOLS (N)

MALL KEY PLAN (K)

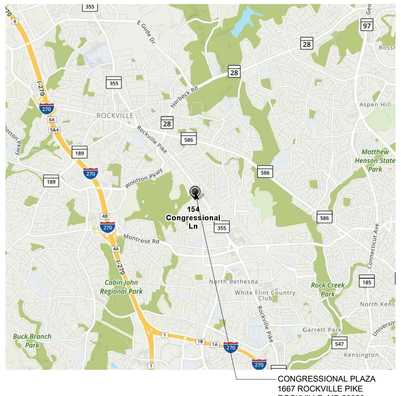

LOCATION MAP (J)

AREA CALCULATIONS (F)

NOT USED (E)

CODE INFORMATION (A)

OWNER:

5A LANDS' END LANE
DODGEVILLE, WI 53595

ARCHITECT / ENGINEER:

SHREMSHOCK
Shremshock Architects, Inc.
7400 W. Campus Rd. Suite 150 New Albany, OH 43054
t: 614 545-4550 | f: 614 545-4555 | shremshock.com
Gerald S. Shremshock, Architect
Timothy J. Shremshock, Architect

©2019 THE ARCHITECT / ENGINEER ASSUMES NO RESPONSIBILITY FOR USE OF PART OF THESE PLANS FOR ANY PROJECT OTHER THAN SPECIFICALLY AUTHORIZED BY THEM AND SIGNED AND SEALED FOR SUCH SPECIFIC LOCATION IN THE STATE, PROVINCE OR TERRITORY SHOWN ON THE SEAL. THIS BUILDING USE IS ONLY APPLICABLE IN AREAS MEETING THE STATED DESIGN CRITERIA.

LANDS' END

STORE NO:
TBD

PROJECT LOCATION:
CONGRESSIONAL PLAZA
1667 ROCKVILLE PIKE
SPACE #06
ROCKVILLE, MD 20852

DESIGN TYPE:
-

REVISIONS:

REQUIRED BY:		DATE
1	BRW CLIENT, LANDLORD & B.D. COMMENTS	07/19/2019

* INDICATES NO REVISION TO THIS SHEET

Professional Certification

I certify that these documents were prepared or approved by me, and that I am a duly licensed architect under the laws of the State of Maryland license number 17246 **expiration date** February 28, 2021.

TITLE SHEET

DRAWN BY: JAW CHECKED BY: BRW/ELM/RHW

DATE ISSUED: 06/07/2019
PROJECT NO: 190148

DRAWING NO:
G1.1

L = LANDLORD
G = GENERAL CONTRACTOR
O = OWNER
E = EXISTING
N/A = NOT APPLICABLE

NOTES:
ALL ITEMS NOT FOUND IN THIS MATRIX ARE TO BE SUPPLIED AND INSTALLED BY GENERAL CONTRACTOR
G.C. TO SUPPLY AND INSTALL ALL BLOCKING AND ATTACHMENTS AS REQUIRED FOR INSTALLATION OF ALL OWNER SUPPLIED ITEMS
ALL BLOCKING TO BE FIRE RETARDANT TREATED
G.C. REQUIRED TO NOTIFY OWNER W/ IN 24 HOURS IF DAMAGED PARTS ARE RECEIVED OR IF PARTS ARE MISSING
G.C. TO REFER TO OSM FOR CONTACT NAME AND PHONE NUMBER

ITEM	SUPPLIED	INSTALLED	KEYNOTES	PROPRIETARY VENDOR / COMMENTS
DIVISION 01 - GENERAL REQUIREMENTS				
PERMITS, FEES, INSURANCE CERTIFICATES, ETC.	O	O		PERMIT APPLIED FOR BY, PICKED UP BY AND PAID FOR BY TENANT.
BARRICADE, PHASING PARTITIONS AND DOORS	G	G		
BARRICADE GRAPHICS	O	O		LANDLORD APPROVAL REQUIRED. REFER TO SHEET A1.1
TEMP. BANNER GRAPHICS	O	O		SECOND SURFACE GRAPHICS. LANDLORD APPROVAL REQUIRED.
TEMP. UTILITIES AND EQUIPMENT	G	G		PROVIDE ACCOUNT NUMBERS TO OWNER (G.C. TO NOTE # OF WEEKS AND COST PER WEEK IN BID)
COORDINATION OF INSPECTIONS	G	G		
RECEIVING AND UNLOADING OWNER SUPPLIED MATERIALS	G	G	2	PROVIDE LABOR DURING CONSTRUCTION AND AT END OF PROJECT, TURNOVER LABOR AS REQUIRED (REFER TO BID PACKET)
FINAL PROFESSIONAL CLEANUP AND TRASH REMOVAL	G	G		INCLUDE 1 MAJOR CLEANING IN BID (TURNOVER)
FINAL JOB SITE PLANS	G	G		INCLUDE 6" Ø PLAN TUBE. REFER TO DETAIL F/14.1 - G.C. TO PROVIDE CLEAN JOBSITE REDLINED AS-BUILT IN TUBE.
CERTIFICATE OF OCCUPANCY	G	G		POSTED IN 8 1/2" X 11" OVER ELECTRICAL LIGHT SWITCH IN BOH
DIVISION 02 - EXISTING CONDITIONS/SELECTIVE DEMOLITION				
DEMOLITION AND LOCALLY COMPLIANT REMOVAL	G/L	G/L		REFER TO DEMO SHEET. G.C. TO NOTIFY CONSULTANTS IMMEDIATELY OF ANY CONCEALED OR UNFORESEEN CONDITIONS AS THEY ARE IDENTIFIED
SAW CUTTING/CORE DRILLING SLAB	G	G		CONTRACTOR IS RESPONSIBLE TO X-RAY SLAB TO CONFIRM NO OBSTRUCTIONS PRIOR TO ANY SLAB PENETRATIONS
ADJACENT LANDLORD FINISHES	G/E	G/E		CONTRACTOR IS RESPONSIBLE TO PROTECT ADJACENT MALL FINISHES, PATCH AND REPAIR ALL ADJACENT MALL FINISHES TO LIKE NEW CONDITION
NEUTRAL PIERS	G/E	G/E		EXISTING, G.C. TO PATCH AND REPAIR AS REQUIRED
DIVISION 03 - CONCRETE				
CONCRETE SLAB / INFILL	E/G	E/G		G.C. TO PERFORM MOISTURE TEST (REFER TO PLANS & SPECIFICATIONS)
VAPOR BARRIER	E/G	E/G		
CONCRETE SLAB PATCHING, LEVELING AND CUTTING	G	G		CREATE SMOOTH LEVEL SURFACE.
CONCRETE SKIM COAT	G	G		FLOOR LEVELING FOR MOBILE SHELVING
DIVISION 04 - MASONRY				
STONE	E	E		
~~MAIN STREET VENEER~~	~~G~~	~~G~~		
CONCRETE BLOCK OR MASONRY CONSTRUCTION	E	E		BASE BUILDING TENANT SEPARATION WALL
DIVISION 05 - METALS				
~~STRUCTURAL STEEL~~	~~G~~	~~G~~		~~REFER TO STRUCTURAL PLANS AND SPECIFICATIONS, ARCHITECTURAL PLANS AND STOREFRONT SHEETS, AND FIXTURING DETAIL SHEETS~~
STRUCTURAL AND LIGHT GAUGE METAL FRAMING	G	G		
TENANT SEPARATION WALL STUDS	E/L	E/L	1	REFER TO PLANS
GARCY STUDS	O	G		
DECORATIVE METALS/METAL PANELS	G	G		
DIVISION 06 - CARPENTRY				
WOOD ROUGH FRAMING, BLOCKING AND FURRING	G	G		REFER TO PLANS AND DETAILS FOR LOCATION AND HEIGHT, REFER TO SPECIFICATIONS FOR ADDITIONAL INFORMATION REGARDING TREATMENTS
PLYWOOD	G	G		
DIVISION 07 - THERMAL AND MOISTURE PROTECTION				
WATERPROOF MEMBRANE AND SEALANTS	E/G	E/G		PROVIDE AT ALL RESTROOMS AND PER LANDLORD CRITERIA
SATT INSULATION	E/G	E/G		PROVIDE AT NEW AND REMODELED EXTERIOR WALLS AS NOTED
~~SOUND BATTING / ATTENUATION~~	~~G~~	~~G~~		~~PROVIDE AT RESTROOM WALLS THAT ARE ADJACENT TO SALES AREA OR PITCH ROOMS~~
ROOFING PENETRATIONS AND FLASHINGS	G	G		COORDINATE WITH LL AND LL'S REQUIRED ROOFER. EXISTING TO BE MODIFIED. REFER TO MECHANICAL DRAWINGS.
FIRE PROOFING / STOPPING	G	G		G.C. TO VERIFY EXISTING CONDITIONS 1 WEEK PRIOR TO START
SEALANTS AND CAULKING	G	G		FIRE CAULKING - PER LOCAL CODE
~~INFANSION JOINTS~~	~~G~~	~~G~~		
DIVISION 08 - OPENINGS				
METAL DOORS, FRAMES AND HARDWARE	G	G		REFER TO DOOR SCHEDULE
ACCESS PANELS	G	G		PROVIDE PER LOCATIONS ON PLAN AND AS REQUIRED BY LANDLORD OR INSPECTOR'S REQUEST (REFER TO SPECIFICATIONS), FINAL QUANTITIES TO BE SITE VERIFIED
STOREFRONT GLAZING SYSTEM (MULLIONS AND GLASS)	E/G	E/G		REPAIR (E) WOOD STOREFRONT SYSTEM AND PAINT, INSTALL NEW ALUMINUM SYSTEM AS NOTED
STOREFRONT ENTRY DOORS AND HARDWARE	G	G		
FITTING ROOM DOORS AND HARDWARE	O	G		DOOR LEAVES & FRAMES PROVIDED BY OWNER'S VENDOR; HARDWARE, PREP, INSTALLATION PROVIDED BY G.C.
DIVISION 09 - FINISHES				
CEILINGS	E/G	E/G		REFER TO FINISH SCHEDULE AND CEILING PLANS
PAINTS AND PRIMERS	G	G		CONTRACTOR IS RESPONSIBLE FOR ALL PREP, PRIMERS, AND FINAL PAINT FINISHES THROUGHOUT
FAUX BRICK PANELS	G	G	2	G.C. IS RESPONSIBLE FOR CUTTING, EDGING, AND INSTALLATION
FLOORING	O	G	2	REFER TO FINISH SCHEDULE
WALL BASE	O	G	2	REFER TO FINISH SCHEDULE
WALL TRIMS	O	G	2	REFER TO FINISH SCHEDULE
STOREFRONT FINISHES	E/G	E/G		REFER TO STOREFRONT SHEETS AND FINISH SCHEDULE
GYPSUM BOARD, TENANT SEPARATION PARTITIONS	E/L	L		REFER TO PARTITION LEGEND ON A2.1. (V.I.F.)
GYPSUM BOARD (ALL OTHER WALLS)	G	G		
CEMENTITIOUS TILE BACKER BOARDS	G	G		
~~WALL FLOORING~~	~~E/G~~	~~E/G~~		~~OBTAIN FROM MALL OPERATIONS (COORDINATE WITH LL PRIOR TO BID)~~
FLOOR TRANSITION STRIP	G	G		REFER TO PLANS
~~REVEALS~~	~~G~~	~~G~~		~~TO BE FLUSH WITH ADJACENT FINISHES~~
SALES FLOOR MIRRORS	G	G		REFER TO FINISH SCHEDULE AND P/A10.2. GLAZER TO APPLY SHATTER GUARD TO BACK OF MIRROR
~~WRAPS METAL~~	~~G~~	~~G~~	~~2~~	~~ALL EDGES TO BE SEAMED~~
DIVISION 10 - SPECIALTIES				
STOREFRONT SIGNAGE	O	O		REFER TO APPROVED SIGN SHOP DRAWINGS, G.C. TO COORDINATE ELECTRICAL PATHWAYS & BLOCKING REQUIREMENTS W/ SIGN VENDOR
~~AWNINGS / CANOPY~~	~~O~~	~~O~~		~~G.C. TO PROVIDE BLOCKING / REFER TO APPROVED SIGN SHOP DRAWINGS~~
BLADE SIGN	O	O		G.C. TO PROVIDE BLOCKING AND ELECTRICAL CONNECTION/ REFER TO APPROVED SIGN SHOP DRAWINGS
~~OWNER SIGNAGE (PYLON SIGN)~~	~~L~~	~~L~~		
SPEAKERS	O	O		
MISC. SIGNAGE - ACCESSIBLE, HVAC AND SERVICE DOOR	G	G		PER TENANT CRITERIA AND LOCAL CODES
CASH REGISTERS/POS SYSTEMS	O	O		
TOILET ROOM ACCESSORIES	E/G	E/G		REFER TO PLANS
WINDOW VINYL GRAPHICS	O	O		G.C. TO COORDINATE
STOCKROOM ACCESSORIES	G	G		
FIRE EXTINGUISHER(S)	G	G		AS PER LOCAL CODE, QUANTITY AND LOCATION PER FIRE MARSHALL (2-A OR 2-A/10 BC)
FITTING ROOM MIRRORS	G	G		REFER TO FINISH SCHEDULE AND P/A10.2. GLAZER TO APPLY SHATTER GUARD TO BACK OF MIRROR
FITTING ROOM ACCESSORIES	O	G	2	
GO-BACK NICHE SHELVING AND HARDWARE	G	G		
DIVISION 12 - FURNISHINGS				
FURNITURE / FIXTURES AND HARDWARE	O	G	2, 5	
CASHWRAP/BACKWRAP	O	G	2, 5	OWNER TO PROVIDE BASE. G.C. TO SECURE TIGHT TO FLOOR.
FITTING ROOM BENCHES, CUSTOM ADA COMPLIANT BENCH, AND FIREPLACE MANTLE	O	G	2, 5	
STOCKROOM LOCKERS AND ACCESSORIES	O	G		REFER TO SHEET A14.1
STOCKROOM SHELVING (MOBILE AND FIXED)	O	O		REFER TO SHEET A14.1
MANAGERS DESK AND SHELVING	G	G		
RECEIVING DESK AND SHELVING	G	G		
BREAK AREA AND SHELVING	G	G		
FILING CABINETS	O	O		
DIVISION 13 - SPECIAL CONSTRUCTION - (NOT USED)				
DIVISION 14 / DIVISION 20 - (NOT USED)				

L = LANDLORD
G = GENERAL CONTRACTOR
O = OWNER
E = EXISTING
N/A = NOT APPLICABLE

NOTES:
ALL ITEMS NOT FOUND IN THIS MATRIX ARE TO BE SUPPLIED AND INSTALLED BY GENERAL CONTRACTOR
G.C. TO SUPPLY AND INSTALL ALL BLOCKING AND ATTACHMENTS AS REQUIRED FOR INSTALLATION OF ALL OWNER SUPPLIED ITEMS
ALL BLOCKING TO BE FIRE RETARDANT TREATED
G.C. REQUIRED TO NOTIFY OWNER W/ IN 24 HOURS IF DAMAGED PARTS ARE RECEIVED OR IF PARTS ARE MISSING
G.C. TO REFER TO OSM FOR CONTACT NAME AND PHONE NUMBER

ITEM	SUPPLIED	INSTALLED	KEYNOTES	PROPRIETARY VENDOR / COMMENTS
DIVISION 21 - FIRE SUPPRESSION SPRINKLER SYSTEMS / DIVISION 22 - PLUMBING / DIVISION 23 - HVAC				
SPRINKLER STUB	E	E	1	
SPRINKLER MAIN	E	E	1	
SPRINKLER GRID	E/G	G	1	
SPRINKLER MODIFICATIONS	G	G		
PLUMBING STUBS (SAN., DCW, VENT)	E	E		
PLUMBING WORK AND FIXTURES/APPURTENANCES REQUIRED FOR ROUGH-IN	L	L		
PLUMBING FIXTURES	L	L		
WATER METER	L	L		
MECHANICAL EQUIPMENT	L	L		
ROOF CURBS	L	L		
ALL DUCTWORK (LOW PRESSURE AND FLEXIBLE DUCT, ETC.)	G	G	1	
AIR DEVICES - DIFFUSERS GRILLES AND BAFFLES	G	G	1	
FIRE DAMPERS - WALL AND/OR CEILING	N/A	N/A		
MANUAL BALANCING DAMPER	G	G		
HVAC PIPING / REFRIGERANT LINES	E	E		
OUTSIDE AIR ACCESS AND DUCTWORK	N/A	N/A		
RELIEF AIR ACCESS AND DUCTWORK	N/A	N/A		
SMOKE PURGE AND CONTROLS	N/A	N/A		
DUCT SMOKE DETECTORS	G	G	1	
ZONE DAMPERS	N/A	N/A		
UNIT HEATER	N/A	N/A		
TEMPERATURE CONTROL SYSTEM	G	G	1	
TOILET EXHAUST FAN	L	L		
TOILET EXHAUST DUCTWORK	E	E		
AIR BALANCE REPORT	G	G		
DIVISION 24 / DIVISION 25 - (NOT USED)				
DIVISION 26 - ELECTRICAL / DIVISION 27 - COMMUNICATIONS / DIVISION 28 - ELECTRONIC SAFETY AND SECURITY				
MAIN SWITCH / OVERCURRENT PROTECTION IN LANDLORDS ELECTRICAL ROOM	E/G	E/G	1	ASSIGN EXISTING (2) 200A, 208V, 3PH, 3W SERVICES PER SHEET E4.0
TENANT ELECTRICAL METER	E/G	E/G	1,7	ASSIGN EXISTING (2) 200A, 208V, 3PH, 3W SERVICE METERS PER SHEET E4.0
MAIN SERVICE CONDUIT	E	E	1	
MAIN SERVICE WIRING	E	E	1	
TELEPHONE CONDUIT AND PULL STRING TO SPACE	E/G	E/G	1	EXTEND EXISTING TO TENANT TELEPHONE BOARD/I.T. RACK LOCATION IN OFFICE
TELEPHONE CONDUIT AND PULL STRING FROM STUB TO BOARD	G	G		
TELEPHONE WIRE FROM LANDLORD ROOM TO TENANT BOARD	E	E		
TENANT ELECTRICAL PANELS	G	G		
TENANT ELECTRICAL TRANSFORMERS	N/A	N/A		
HVAC POWER CONNECTION AND DISCONNECT	G	G		
CONDUIT, WIRING AND DEVICES	G	G		
LIGHTING FIXTURES / LAMPS	O	G	2	
LIGHTING AND SIGNAGE CONTROLS	G	G		
TELEPHONE PANEL	G	G	1,7	GC TO PROVIDE PLYWOOD BACKERBOARD AS REQUIRED - VENDOR TO COMPLETE INSTALLATION
TELEPHONE AND DATA CONDUIT AND CCTV CONDUIT	G	G		
TELEPHONE AND DATA CABLING	O	O		CAT 6 IS REQUIRED FOR TELEPHONE AND DATA CABLING
SOUND SYSTEM WIRING	O	O		
SPEAKERS AND BACK BOXES	O/G	O/G	3	GC TO PROVIDE POLE AND CONDUIT W/ PULLSTRING - VENDOR TO COMPLETE INSTALLATION
FIRE ALARM SYSTEM/DEVICES	E/G	E/G		
CLOSED CIRCUIT SECURITY SYSTEM EQUIPMENT	O	O		
CLOSED CIRCUIT SECURITY SYSTEM WIRING	O	O		GC TO PROVIDE POLE AND CONDUIT W/ PULLSTRING
BUZZER SYSTEM	G	G		

GENERAL NOTES
1. THIS RESPONSIBILITY MATRIX DELINEATES:
   - OWNER AND LANDLORD SUPPLIED ITEMS
   - OWNER AND LANDLORD INSTALLED ITEMS
   - EXISTING LANDLORD WORK TO BE VERIFIED BY G.C.
2. SEE M.E.P. DRAWINGS FOR ADDITIONAL INFORMATION
3. NO SUBSTITUTIONS OF ANY MATERIALS OR ITEMS SPECIFIED IN THE DOCUMENTS ARE PERMITTED, U.N.O. & APPROVED BY THE OWNER.
4. SEE ARCHITECTURAL SPECIFICATION SHEET FOR ADDITIONAL INFO - ANY DISCREPANCIES ARE TO BE BROUGHT UP TO THE GENERAL CONTRACTOR PRIOR TO INSTALLATION

DEFINITIONS
1. SUPPLIED - MEANS SUPPLY AND DELIVER TO PROJECT, FREIGHT ON BOARD TRUCK UNLESS OTHERWISE DEFINED IN GREATER DETAIL.
2. INSTALLED - DESCRIBES OPERATIONS AT PROJECT FROM INSPECTION AND UNLOADING TO COMPLETION IN PLACE, READY FOR INTENDED USE.

KEYNOTES
1. G.C. TO VERIFY EXISTING CONDITION IS ACCEPTABLE FOR ALL NEW WORK.
2. G.C. IS RESPONSIBLE FOR UNLOADING OWNER SUPPLIED CONSTRUCTION ITEMS. G.C. TO COORDINATE SCHEDULE AND DELIVERY WITH SUPPLIER. STANDARD SHIPPING PROVIDED BY OWNER. G.C. IS RESPONSIBLE FOR ANY EXPEDITED SHIPPING COSTS AND PROVIDING LABOR AND EQUIPMENT ITEMS. ALL DELIVERIES REQUIRED TO HAVE LIFT GATES BY LANDS' END.
3. G.C. REQUIRED TO PURCHASE FROM SPECIFIED VENDOR AND RESPONSIBLE FOR COORDINATION AND DELIVERY
4. G.C. TO PROVIDE CONDUIT AND J-BOXES AS REQUIRED - REFER TO ELECTRICAL DRAWINGS.
5. NO SUBSTITUTIONS OF ANY MATERIALS OR ITEMS SPECIFIED IN THE DOCUMENTS ARE PERMITTED, U.N.O. & APPROVED BY THE OWNER.
6. G.C. IS REQUIRED TO UNWRAP & INSPECT ALL OWNER SUPPLIED MATERIAL, FIXTURES & HARDWARE IMMEDIATELY UPON RECEIPT & REPORT DAMAGES, IMPERFECTIONS OR MISSING ITEMS WITHIN 24 HOURS OF RECEIPT - FAILURE TO DO SO CAN RESULT IN BACKCHARGE.
7. UTILITY SET-UP BY G.C. REQUIRED TO BE COMPLETED BY WEEK 1 OF POSSESSION. ALL UTILITIES INCLUDING GAS MUST BE TURNED ON PRIOR TO C.O.

RESPONSIBILITY SCHEDULE

A

OWNER:

5A LANDS' END LANE
DODGEVILLE, WI 53595

ARCHITECT / ENGINEER:

SHREMSHOCK
Shremshock Architects, Inc.
7400 W. Campus Rd. Suite 150 New Albany, OH 43054
t: 614 545-4550 | f: 614 545-4555 | shremshock.com
Gerald S. Shremshock, Architect
Timothy J. Shremshock, Architect

©2019 THE ARCHITECT / ENGINEER ASSUMES NO RESPONSIBILITY FOR THE USE OF THESE PLANS OR THESE PLANS FOR ANY PROJECT OTHER THAN SPECIFICALLY AUTHORIZED BY THEM AND SIGNED AND SEALED FOR SUCH SPECIFIC LOCATION IN THE STATE, PROVINCE OR TERRITORY SHOWN ON THE SEAL. THIS BUILDING USE IS ONLY APPLICABLE IN AREAS MEETING THE STATED DESIGN CRITERIA.

LANDS' END

STORE NO:
TBD

PROJECT LOCATION:
CONGRESSIONAL PLAZA
1667 ROCKVILLE PIKE
SPACE #06
ROCKVILLE, MD 20852

DESIGN TYPE:
-

REVISIONS:

REQUIRED BY:	DATE
1 CLIENT, LANDLORD & B.D. COMMENTS	07/19/2019

* INDICATES NO REVISION TO THIS SHEET

RESPONSIBILITY SCHEDULE

Professional Certification
I certify that these documents were prepared or approved by me, and that I am a duly licensed professional engineer under the laws of the State of Maryland license number 17246, expiration date February 28, 2021.

DRAWN BY: JAW/TAV CHECKED BY: BRW/EL M/RHW

DATE ISSUED: 06/07/2019
PROJECT NO: 190148
DRAWING NO:
G1.2

REGULATIONS
1. THE CONTRACTOR SHALL HAVE EVIDENCE OF CURRENT WORKER'S COMPENSATION INSURANCE ON FILE IN COMPLIANCE WITH LOCAL CODE.
2. BEFORE COMMENCING WITH THE WORK, THE G.C. SHALL SHOW EVIDENCE OF ALL THE INSURANCE REQUIREMENTS.
3. THE CONTRACTOR SHALL BE FAMILIAR WITH ALL LANDLORD REQUIREMENTS AND SHALL BE RESPONSIBLE FOR COMPLIANCE WITH SAME. THE CONTRACTOR SHALL INVESTIGATE LOCAL CODES AND PROCEDURES AND SHALL COMPLY WITH ALL REQUIREMENTS.
4. SIGN CONTRACTOR TO OBTAIN SIGN PERMITS FROM BUILDING DEPARTMENT AS APPLICABLE. AN IDENTIFYING STICKER MAY BE INSTALLED, PROVIDING IT CANNOT BE SEEN BY PASSERSBY.
5. THE CONTRACTOR SHALL CONTACT LANDLORD REPRESENTATIVE BEFORE CONSTRUCTION COMMENCES.
6. ALL CONDUIT, EQUIPMENT AND MATERIALS SHALL BE IN FULL ACCORDANCE WITH THE LATEST SAFETY RULES AND REGULATIONS OF ALL AUTHORITIES AND AGENCIES HAVING JURISDICTION.
7. THE CONTRACTOR SHALL MAINTAIN FOR THE ENTIRE DURATION OF THE WORK ALL EXITS, EXIT LIGHTING, FIRE PROTECTION DEVICES AND ALARMS IN CONFORMANCE WITH ALL APPLICABLE CODES AND ORDINANCES.
8. PROVIDE OCCUPANCY SIGNS CONFORMING TO APPLICABLE BUILDING CODE REQUIREMENTS.
9. PROVIDE ADDITIONAL EXIT SIGNS AND FIRE EXTINGUISHERS IN TYPE, NUMBER AND LOCATIONS AS DIRECTED BY THE FIRE DEPARTMENT FIELD INSPECTOR.

JOB SITE OPERATIONS
1. DURING ALL PHASES OF WORK DO NOT DISTURB THE DELIVERIES AND FUNCTIONS OF ADJACENT AND NEIGHBORING TENANTS.
2. EACH CONTRACTOR SHALL LEAVE THE SITE IN A NEAT, CLEAN AND ORDERLY CONDITION UPON THE COMPLETION OF THEIR WORK ON A DAILY BASIS. AREA OF WORK TO BE DUSTED, SWEPT AND MOPPED TO SAME CONDITION AS START OF WORK. ALL WASTE, RUBBISH AND EXCESS MATERIALS SHALL BE REMOVED FROM THE SITE PROMPTLY. THE G.C. SHALL BE RESPONSIBLE FOR REMOVAL AND DISPOSAL OF ALL TRASH, INCLUDING TRASH GENERATED FROM OWNER FURNISHED ITEMS AND BY OWNER'S CONTRACTORS FOR THE DURATION OF THE PROJECT.
3. ALL EXISTING WORK NOT IN THIS SCOPE OF WORK SHALL BE MAINTAINED IN ITS ORIGINAL CONDITION, U.N.O. PROTECT WORK FROM DAMAGE RESULTING FROM THIS WORK.
4. REMOVE ALL ABANDONED IMPROVEMENTS, INCLUDING ELECTRICAL AND MECHANICAL, U.N.O.

MATERIALS
1. WHEN CONTRACTOR ACCEPTS DELIVERY OF ALL ITEMS NOTED ON PLANS WHETHER IN CONTRACT OR NOT IN CONTRACT, THE G.C. SHALL BE RESPONSIBLE FOR LOSS AND/OR DAMAGE TO THESE ITEMS.
2. G.C. SHALL BE RESPONSIBLE FOR COORDINATION WITH OWNER'S REPRESENTATIVE TO PROVIDE A TIMELY ARRIVAL OF ALL MATERIALS, EQUIPMENT AND OTHER SUCH ITEMS TO BE UTILIZED ON THIS PROJECT (OWNER-PROVIDED OR OTHERWISE). G.C. SHALL NOTIFY OWNER'S REPRESENTATIVE IN WRITING WITHIN 5 DAYS OF DATE OF APPROVED WORK AUTHORIZATION OF THOSE ITEMS THAT MAY NOT BE READILY AVAILABLE. IF NOTIFICATION IS NOT PROVIDED TO THE OWNER'S REPRESENTATIVE, THE CONTRACTOR ACCEPTS RESPONSIBILITY FOR THE PROPER ORDERING AND FOLLOW-UP OF SPECIFIED ITEMS AND WILL PURSUE WHATEVER MEANS NECESSARY AT NO ADDITIONAL COST TO OWNER.
3. CONTRACTOR TO ENSURE AVAILABILITY OF ALL SPECIFIED ITEMS SO AS NOT TO CREATE A HARDSHIP TO THE OWNER AND NOT DELAY PROGRESS OF THE WORK. NO EXTENSION OF TIME SHALL BE PERMITTED.
4. CONTRACTOR SHALL BE RESPONSIBLE TO RECEIVE, INVENTORY, STORE AND SECURE ANY OWNER FURNISHED ITEMS (OFI) SUPPLIED AND DELIVERED TO THE JOBSITE, OR OTHER AGREED UPON LOCATION, AND FORWARD THE RECEIVING DOCUMENT(S) TO THE OWNER
5. THE CONTRACTOR SHALL LEAVE WITH STORE MANAGER ONE (1) GALLON OF PAINT OF EACH COLOR FOR FUTURE TOUCH-UP WORK.
6. NO SUBSTITUTIONS OF ANY MATERIALS OR ITEMS SPECIFIED IN THE DOCUMENTS ARE PERMITTED, U.N.O. AND APPROVED BY OWNER.
7. ANY WOOD CONSTRUCTION SHALL BE FIRE RETARDANT TREATED. INTERIOR FINISHES SHALL NOT EXCEED A FLAME SPREAD RATING OF 25 AT EXIT CORRIDOR
8. G.C. RESPONSIBLE FOR COORDINATION OF ALL OWNER PROVIDED VENDORS FOR DELIVERY INCLUDING, RETURN OF ANY EXCESS MATERIALS

DRAWINGS
1. ALL CONTRACTORS, SUBCONTRACTORS, VENDORS AND MATERIAL SUPPLIERS SHALL BE RESPONSIBLE FOR REVIEWING THE COMPLETE SET OF DOCUMENTS AS SHOWN IN THE SHEET INDEX. FAILURE TO REVIEW CONSTRUCTION DOCUMENTS WILL NOT RELIEVE ANY CONTRACTORS, SUBCONTRACTORS, VENDORS OR MATERIAL SUPPLIERS FROM PERFORMING WORK OR PROVIDING MATERIALS REQUIRED FOR THE COMPLETION OF THIS PROJECT AS DEFINED WITHIN THE DOCUMENTS AT TIME OF BID.
2. G.C. SHALL COORDINATE WORK PERFORMED BY OTHER CONTRACTORS. ANY DISCREPANCIES SHALL BE BROUGHT TO THE OWNER'S ATTENTION (VERBALLY & DOCUMENTED IN WRITING) BEFORE PROCEEDING WITH WORK.
3. SHOULD A CONFLICT EXIST BETWEEN THE CONSTRUCTION DOCUMENTS AND/OR THE SPECIFICATIONS THE OWNER'S REPRESENTATIVE SHALL BE INFORMED (VERBALLY & DOCUMENTED IN WRITING) OF THIS DISCREPANCY IMMEDIATELY, AT WHICH TIME OWNER'S REPRESENTATIVE SHALL PROVIDE DIRECTION AS TO HOW TO PROCEED.
4. INSPECT SITE AND VERIFY FIELD DIMENSIONS BEFORE COMMENCING WITH CONSTRUCTION. NOTIFY OWNER'S REPRESENTATIVE AND LANDLORD IMMEDIATELY IF THERE ARE ANY DISCREPANCIES.
5. DO NOT SCALE DRAWINGS. WRITTEN DIMENSIONS TAKE PRECEDENCE OVER SCALED DRAWINGS.
6. ARCHITECTURAL DRAWINGS TAKE PRECEDENCE OVER OTHER DRAWINGS FOR LAYOUT DIMENSIONS AND NUMBER OF ITEMS PROVIDED. UPON DISCOVERY OF DISCREPANCIES BETWEEN ARCHITECTURAL DRAWINGS AND ENGINEERING DRAWINGS, OWNER SHALL BE IMMEDIATELY NOTIFIED IN WRITING.
7. IF ANY ERRORS OR OMISSIONS APPEARS IN CONTRACT DOCUMENTS CONTRACTOR SHALL NOTIFY OWNER IN WRITING OF SUCH ERRORS OR OMISSIONS.
8. DIMENSIONS SHOWN ON PLANS ARE TO FACE OF CMU, CONCRETE COLUMNS OR GRID LINES AND FACE OF GYPSUM BOARD UNLESS OTHERWISE NOTED OR DETAILED. CABINET OPENING DIMENSIONS ARE TO FACE OF FINISH GYP. BD.
9. THE CONTRACTOR SHALL REVIEW ALL DOCUMENTS, VERIFY ALL DIMENSIONS AND FIELD CONDITIONS AND CONFIRM WORK IS BUILDABLE AS SHOWN. ANY CONFLICTS OR OMISSIONS, ETC. SHALL BE IMMEDIATELY REPORTED TO THE ARCHITECT / OWNER FOR CLARIFICATION PRIOR TO PERFORMANCE OF ANY WORK IN QUESTION.
10. COLUMN CENTER LINE (OR GRID LINES) ARE SHOWN FOR DIMENSIONS. VERIFY EXACT LOCATIONS IN FIELD.
11. OWNER'S REPRESENTATIVE AND TENANT ARE THE SAME FOR PURPOSES OF THESE DRAWINGS.

BUILDING ENVELOPE
1. ALL OPENINGS, FLASHINGS, COUNTER FLASHINGS, AND EXPANSION JOINTS SHALL BE WATERTIGHT.
2. ALL OPEN JOINTS, PENETRATIONS AND OTHER OPENINGS IN THE BUILDING ENVELOPE SHALL BE SEALED, CAULKED, GASKETED OR WEATHER-STRIPPED TO LIMIT AIR LEAKAGE.
3. USE ACOUSTICAL SEALANT AROUND ALL PIPES, DUCTS, CONDUIT, OUTLETS, SWITCHES, ETC. ON BOTH SIDES OF CROSSING / PENETRATING WALLS WITH THERMAL AND ACOUSTICAL INSULATION.
4. ALL SAW CUTTING AND CORING LOCATIONS SHALL BE REVIEWED AND COORDINATED WITH THE LANDLORD PRIOR TO CUTTING/ CORING.

ANY DISCREPANCIES BETWEEN THE EXISTING CONDITIONS AND THE ACTUAL FIELD CONDITIONS SHALL BE BROUGHT TO THE ATTENTION OF THE OWNER BEFORE PROCEEDING WITH ANY WORK.

GENERAL CONTRACTOR SHALL VISIT THE SITE PRIOR TO SUBMITTAL OF BID TO DETERMINE CONDITIONS AFFECTING THE WORK. ANY ITEMS WHICH ARE NOT COVERED IN THE BID DOCUMENTS OR ANY PROPOSED SUBSTITUTIONS SHALL BE LISTED SEPARATELY AND QUALIFIED IN THE CONTRACTOR'S BID. SUBMITTAL OF BID SHALL SERVE AS EVIDENCE OF KNOWLEDGE OF EXISTING CONDITIONS AND ANY MODIFICATIONS WHICH ARE REQUIRED TO MEET THE INTENT OF THE DRAWINGS AND SPECIFICATIONS. FAILURE TO VISIT THE SITE DOES NOT RELIEVE THE CONTRACTOR OF RESPONSIBILITY IN PERFORMANCE OF WORK.

G.C. TO FIELD VERIFY ALL DIMENSIONS AND SITE CONDITIONS PRIOR TO COMMENCEMENT OF WORK. IF GENERAL CONTRACTOR FINDS ANY DISCREPANCY IN DRAWING SET OR DURING FIELD VERIFICATION THE GENERAL CONTRACTOR IS TO CONTACT OWNER'S REPRESENTATIVE VIA PHONE (OR EMAIL) PRIOR TO COMMENCEMENT OF ANY FURTHER WORK AFTER DISCREPANCY HAS BEEN IDENTIFIED. FAILURE TO DO SO PLACES SOLE RESPONSIBILITY ON THE G.C. FOR ANY WORK DONE REGARDING THAT MATTER.

GENERAL NOTES R

MARK	DOOR INFORMATION				FRAME INFORMATION					NOTES
	LOCATION	NOMINAL SIZE	MATERIAL	FINISH	MATERIAL	FINISH	FIRE RATING	HEAD/JAMB DETAIL	HDWR.	
101	ENTRY (EXTERIOR)	PR. 3'-0"W. x 7'-0"H. x 1 3/4"	TEMP. GLASS / ALUM.	PREFINISHED (BLUE)	ALUM.	PREFINISHED (BLUE)	-	W/A8.3 & C/A8.4	A1	-
~~102~~	~~ENTRY (INTERIOR)~~	~~PR. 3'-0"W. x 9'-0"H. x 2 1/4"~~	~~TEMP. GLASS / WOOD~~	~~PREFINISHED (BLUE)~~	~~ALUM.~~	~~PREFINISHED (BLUE)~~	~~-~~	~~A/A8.2a & N/A8.3a~~	~~A2~~	~~-~~
103	ACCESSIBLE FITTING ROOM	3'-0"W. x 5'-0"H. x 1 3/8"	SOLID CORE WOOD	PREFINISHED	WOOD	PRIMED; PAINT: P-1B	-	J&K/A10.3	C	REFER TO SHEET A10.2 & A10.3
104	FITTING ROOM	2'-10"W. x 5'-0"H. x 1 3/8"	SOLID CORE WOOD	PREFINISHED	WOOD	PRIMED; PAINT: P-1B	-	J&K/A10.3	C	REFER TO SHEET A10.2 & A10.3
105	(E) TOILET ROOM	3'-0"W. x 7'-0"H. x 1 3/4"	HOLLOW METAL	P-1B	HOLLOW METAL	P-1B	-	-	D	
106	HALLWAY OR FITTING ROOM/ NON-SALES	3'-0"W. x 7'-0"H. x 1 3/4"	HOLLOW METAL	ACROVYN	HOLLOW METAL	P-1B	45 MIN.	U/A11.1 (SIM.)	E	NO KICKSTANDS ALLOWED
107	SALES / HALLWAY	3'-0"W. x 7'-0"H. x 1 3/4"	HOLLOW METAL	ACROVYN	HOLLOW METAL	P-1B	-	U/A11.1	B	NO KICKSTANDS ALLOWED
108	(E) SERVICE	PR. 3'-0"W. x 7'-0"H. x 1 3/4"	HOLLOW METAL	P-1B	HOLLOW METAL	P-1B	90 MIN.	-	G	G.C. TO PAINT TENANT SIDE P-1B AND MALL SIDE TO MATCH MALL STANDARDS.
109	(E) CLOSET	3'-0"W. x 7'-0"H. x 1 3/4"	SOLID CORE WOOD	P-1B	HOLLOW METAL	P-1B	-	-	K	
~~109B~~	~~BLIND DOOR~~	~~2'-4"W. x 6'-11 1/2"H. x 1 3/4"~~	~~SOLID CORE WOOD~~	~~P-1B~~	~~SOLID CORE WOOD~~	~~P-1B~~	~~-~~	~~T/A11.1~~	~~J2~~	
111	OFFICE	3'-0"W. x 7'-0"H. x 1 3/4"	HOLLOW METAL	P-1B	HOLLOW METAL	P-1B	-	U/A11.1	H	

A1. EXTERIOR (ALUM) ENTRY DOORS - PREFINISHED DOORS AND HARDWARE SUPPLIED AND INSTALLED BY G.C. (U.N.O.)
HARDWARE:
PULLS: TBD - REQUESTED ALTERNATE SPEC FROM CLIENT
LOCKSET: PROVIDE BEST LOCK 7 PIN IC CORE KEYAWAY WITH MORTISE SHELL. COLOR: TBD - EACH LEAF
CLOSER: STANDARD THAT COMES WITH DOOR OR CALIBRE 2200 WITH A HOLD OPEN POSITION OF 105 DEGREES. FINISH: MATCH DOORS.
HINGES: BOMMER OR EQUAL, 2 PAIR PER LEAF, 4-1/2" X 4-1/2", NO. BB5004N HEAVY WEIGHT BALL BEARING WITH NON-REMOVABLE PIN, FINISH 612 SATIN BRONZE OR US10
SWEEP: SURFACE APPLIED BOTTOM DOOR SWEEPS WITH CONCEALED FASTENERS (BRUSH STYLE) AND FELT BETWEEN MEETING STILES
THRESHOLD: 5" WIDE MILL FINISH, 1/2" RISE, BACK-CUT
WEATHER STRIPPING: PER MANUFACTURER'S SPECIFICATIONS
EXIT INDICATOR: ADAMS RITE 4089

B. SALES / HALLWAY DOOR: UNFINISHED DOOR, FRAME & HARDWARE - SUPPLIED, INSTALLED & FINISHED BY G.C.
HARDWARE:
HINGES: (3) HAGER #BB1191 BALL BEARING, 4 1/2"X4 1/2". FINISH: US26D SATIN CHROME.
PULL PLATE WITH PULL: IVES 3202-6 PULL PLATE 3.5" x 15" WITH DOOR PULL 6", FINISH: ALUMINUM
CLOSER: NORTON #1601. FINISH: 689 ALUMINUM
PROTECTIVE CLAD: ACROVYN 4000 FULL CLADDING. COLOR: WHITE 949
WALL STOP: IVES #WD407CVX. FINISH US26D SATIN CHROME
FLOOR STOP: IVES #FS13 DOME STOP WITH R14 DOME STOP RISE AS NEEDED. FINISH US26D SATIN CHROME
(PROVIDE WALL OR FLOOR STOP DEPENDING ON LAYOUT)
SILENCER: (3) IVES #SR64

C. FITTING ROOM DOOR: PREFINISHED DOOR, FRAME & HARDWARE - SUPPLIED BY OWNER AND INSTALLED & FINISHED BY G.C.
HARDWARE:
LOCKSET: SCHLAGE "ATHENS" ND80PD STOREROOM LOCK. FINISH: 626 SATIN CHROME
HINGES: (3) HAGER #BB1199NRP BALL BEARING HEAVY WEIGHT NON-RISING PIN, 4 1/2"X4 1/2". FINISH: US26D SATIN CHROME
SILENCER: (2) IVES #SR65
WALL STOP: (1) IVES WS407-CVX WALL STOP. FINISH: US26D SATIN CHROME.
HINGE STOP: (2) DON-JO COMMERCIAL HINGE PIN STOP 1513, FINISH: 619
(PROVIDE WALL OR HINGE STOP DEPENDING ON LAYOUT)

D. (E) TOILET ROOM DOOR: EXISTING DOOR, FRAME AND HARDWARE. G.C. TO ENSURE PROPER FUNCTION AND REPAIR/REPLACE IN KIND IF REQUIRED.
HARDWARE:
COAT HOOK: TBD
KICKPLATE: IVES 8400 10"X34". FINISH 630 BRUSHED STAINLESS (PUSH SIDE ONLY)

E. HALLWAY OR FITTING ROOM/ NON-SALES DOOR: UNFINISHED DOOR, FRAME & HARDWARE - SUPPLIED, INSTALLED & FINISHED BY G.C.
HARDWARE:
HINGES: (3) HAGER #BB1191 BALL BEARING, 4 1/2"X4 1/2". FINISH: US26D SATIN CHROME.
LOCKSET: SCHLAGE PLYMOUTH KEYPAD ENTRY WITH FLEX-LOCK "ELAN" FE595 PLY 626 ELA. FINISH: SATIN CHROME
CLOSER: NORTON #1601. FINISH: 689 ALUMINUM
PROTECTIVE CLAD: ACROVYN 4000 FULL CLADDING. COLOR: WHITE 949
WALL STOP: IVES #WD407CVX. FINISH US26D SATIN CHROME
FLOOR STOP: IVES #FS13 DOME STOP WITH R14 DOME STOP RISE AS NEEDED. FINISH US26D SATIN CHROME
(PROVIDE WALL OR FLOOR STOP DEPENDING ON LAYOUT)
SILENCER: (3) IVES #SR64
G.C. TO INSTALL SMOKE GASKETS
ALL HARDWARE SHALL BE UL LISTED FOR FIRE RATED DOOR INSTALLATION

G. (E) SERVICE DOOR: EXISTING DOOR, FRAME AND HARDWARE. G.C. TO ENSURE PROPER FUNCTION AND REPAIR/REPLACE IN KIND IF REQUIRED
HARDWARE:
(E) LOCKSET: PROVIDE BEST LOCK 7 PIN IC CORE KEYWAY WITH MORTISE SHELL (VERIFY HARDWARE CAN ACCEPT)
~~PROTECTION PLATE: IVES 8400 34"X34". FINISH US32D BRUSHED STAINLESS. INTERIOR DOOR SIDE~~
ONE WAY VIEWER: DOORSCOPES METALLIC DOORSCOPE #DS238. FINISH SILVER ANODIZED. MOUNT AT 60".
ALL HARDWARE SHALL BE UL LISTED FOR FIRE RATED DOOR INSTALLATION

H. OFFICE DOOR: UNFINISHED DOOR, FRAME & HARDWARE - SUPPLIED, INSTALLED & FINISHED BY G.C.
HARDWARE:
HINGES: (3) HAGER #BB1191 BALL BEARING, 4 1/2"X4 1/2". FINISH: US26D SATIN CHROME.
LOCKSET: SCHLAGE PLYMOTH KEYPAD ENTRY WITH FLEX-LOCK "ELAN" FE595 PLY 626 ELA. FINISH: SATIN CHROME
CLOSER: NORTON #1601. FINISH: 689 ALUMINUM
SILENCER: (3) IVES #SR64
WALL STOP: IVES #WD407CVX. FINISH US26D SATIN CHROME

K. (E) CLOSET ROOM DOOR: EXISTING DOOR, FRAME AND HARDWARE. G.C. TO ENSURE PROPER FUNCTION AND REPAIR/REPLACE IN KIND IF REQUIRED.

DOORS SHALL BE OPERABLE FROM WITHIN WITHOUT THE USE OF ANY SPECIAL KNOWLEDGE OR EFFORT WHEN THE SPACE IS OCCUPIED

NOTE:
1. G.C. TO PROVIDE ALL FINISH HARDWARE (U.N.O.), NOT SUPPLIED BY OWNER, BUT NOT LIMITED TO, HINGES, LOCKSETS, CLOSURES, STOPS, THRESHOLDS, SILENCERS, WEATHER-STRIPPING, CYLINDERS MASTER-KEYED, PUSHES, PULLS, KICK-PLATES, ETC. U.N.O.
2. EXTERIOR HINGES TO HAVE NON-REMOVEABLE PINS.
3. FOR FIRE RATED OPENINGS - PROVIDE UL TESTED AND LISTED HARDWARE
4. ALL RATED DOORS TO BE SUPPLIED WITH THRESHOLDS AND SMOKE SEAL PER SPECIFICATIONS AND CODE. SMOKE SEAL IF REQUIRED FOR REAR SALES AND SERVICE DOOR SHALL BE REESE NO 897B SMOKE SEAL.
5. ALL HARDWARE SHALL COMPLY WITH ACCESSIBILITY GUIDELINES.
6. ACCESSIBLE DOORS MUST BE MINIMUM 3'-0" WIDE.
7. SIZE AND MOUNT UNITS TO COMPLY WITH MANUFACTURERS RECOMMENDATIONS FOR THE EXPOSURE CONDITION. REINFORCE THE SUBSTRATE AS RECOMMENDED.
8. INSTALL EACH HARDWARE ITEM TO COMPLY WITH MANUFACTURER'S RECOMMENDATIONS. KEYING TO BE AS DIRECTED BY OWNER'S INSTRUCTION. PROVIDE KEYS IN QUANTITIES TO BE ESTABLISHED BY OWNER.
9. ALL HAND ACTIVATED DOOR OPENING HARDWARE SHALL BE CENTERED BETWEEN 34" TO 44" A.F.F. AND SHALL BE OPERABLE WITH A SINGLE EFFORT BY LEVER TYPE HARDWARE WITHOUT MEANS OF TIGHT GRASPING, PINCHING, OR TWISTING OF THE WRIST.
10. TENANT'S G.C. SHALL ENSURE ALL "EXISTING DOORS TO REMAIN" ARE IN GOOD CONDITION,OPERATING ORDER AND TO MEET ALL LOCAL BUILDING CODES AND ACCESSIBILITY REQUIREMENTS. GENERAL CONTRACTOR TO RESTORE DOORS AND HARDWARE TO "LIKE NEW" CONDITION. GC TO PROVIDE NEW HARDWARE PER HARDWARE SCHEDULE.
11. COORDINATE EXTERIOR DOOR DETAILS AND THRESHOLDS WITH LANDLORD.
12. G.C. TO REVIEW CONDITION OF ALL EXISTING DOOR HARDWARE WITH PROJECT MANAGER TO DETERMINE IF REPLACEMENT IS REQUIRED.
13. BOTTOM 10" OF DOOR SHALL HAVE SMOOTH UNINTERRUPTED SURFACE FOR OPENING BY WHEEL CHAIR FOOTRESTS.
14. DOOR CLOSERS SHALL BE ADJUSTED SO THAT FROM AN OPENING POSITION OF 90 DEGREES, THE TIME REQUIRED TO MOVE THE DOOR TO A POSITION OF 12 DEGREES FROM THE LATCH IS 5 SECONDS MINIMUM.

MAXIMUM EFFORT TO OPERATE DOOR SHALL NOT EXCEED 15 POUNDS FOR EXTERIOR DOORS AND 5 POUNDS FOR INTERIOR DOORS WITH A PULL OR PUSH EFFORT BEING APPLIED AT RIGHT ANGLES TO HINGED DOORS AND AT THE CENTER PLANE OF SLIDING OR FOLDING DOORS. COMPENSATING DEVICES OR AUTOMATIC DOOR OPERATIONS (IF SPECIFIED) MAY BE UTILIZED TO MEET THE ABOVE STANDARDS. FIRE DOORS SHALL HAVE A MINIMUM OPENING FORCE ALLOWABLE BY THE APPROPRIATE ADMINISTRATIVE AUTHORITY.

DOOR AND FRAME SCHEDULE N

CODE	SUPPLIED	INSTALLED	MATERIAL	MANUFACTURER	DESCRIPTION	LOCATION / NOTES
NOTE: G = GENERAL CONTRACTOR AND O = LANDS' END / OWNER						
CEILINGS						
CLG-1	G	G	GYPSUM BOARD	USG OR APPROVED EQUAL	5/8" SUSPENDED GYPSUM BOARD	SALES FLOOR, LOUNGE AREA, FITTING ROOMS AND HALLWAY/CORRIDOR AS REQUIRED BY CODE
~~CLG-2~~	~~G~~	~~G~~	~~ACOUSTICAL TILE~~	~~ARMSTRONG~~	~~SUSPENSION GRID SYSTEM~~	~~GRID: PRELUDE XL EXPOSED TEE SYSTEM, 2'x4'x15/16" WHITE TILE; FINE FISSURED "SECOND LOOK II" (MEDIUM TEXTURE) #1761~~
~~CLG-3~~	~~G~~	~~G~~	~~ACOUSTICAL TILE~~	~~ARMSTRONG~~	~~SUSPENSION GRID SYSTEM~~	~~GRID: TYPE 1, PRELUDE XL 15/16" EXPOSED TEE SYSTEM, COLOR: WHITE TILE: CORTEGA #747 (#823 FIRE RATED), 24"x48"x1/2" NON-DIRECTIONAL, COLOR: WHITE~~
CLG-4	E/G	E/G	ACOUSTICAL TILE	MATCH EXISTING	2'X2' OR 2'X4' TO REMAIN. REFER TO SHEET A3.1	G.C. TO MODIFY GRID WITH NEW CONSTRUCTION AND REPAIR/REPLACE EXISTING TILES AS REQUIRED TO ACHIEVE 'LIKE-NEW' CONDITION
~~CLG-5~~	~~E/G~~	~~E/G~~	~~GYPSUM BOARD~~	~~-~~	~~EXISTING~~	~~G.C. TO PATCH/REPAIR AS REQUIRED TO ACHIEVE 'LIKE-NEW' CONDITION, AS REQUIRED. V.I.F.~~
~~CLG-6~~	~~G~~	~~G~~	~~ACOUSTICAL TILE~~	~~ARMSTRONG~~	~~SUSPENSION GRID SYSTEM~~	~~GRID: TYPE 1, PRELUDE XL 15/16" EXPOSED TEE SYSTEM, COLOR: WHITE TILE: CORTEGA #704 (#816 FIRE RATED), 24"x24"x1/2" NON-DIRECTIONAL, COLOR: WHITE~~
PAINT						
P-1A	G	G	PAINT	SHERWIN WILLIAMS	EXTRA WHITE SW 7006	PROMAR 200 INTERIOR WATERBASED ACRYLIC-ALKYD OR EMERALD EXTERIOR ACRYLIC LATEX PAINT: EGGSHELL (PAINT TO 12'-0" A.F.F. IN NON-SALES AREA)
P-1B	G	G	PAINT	SHERWIN WILLIAMS	EXTRA WHITE SW 7006	PROMAR 200 INTERIOR WATERBASED ACRYLIC-ALKYD OR EMERALD EXTERIOR ACRYLIC LATEX PAINT: SEMI-GLOSS
P-1C	G	G	PAINT	SHERWIN WILLIAMS	EXTRA WHITE SW 7006	PROMAR 200 INTERIOR WATERBASED ACRYLIC-ALKYD OR EMERALD EXTERIOR ACRYLIC LATEX PAINT: FLAT
P-2A	G	G	PAINT	SHERWIN WILLIAMS	SALTY DOG SW 9177	PROMAR 200 INTERIOR WATERBASED ACRYLIC-ALKYD OR EMERALD EXTERIOR ACRYLIC LATEX PAINT: EGGSHELL
P-2B	G	G	PAINT	SHERWIN WILLIAMS	SALTY DOG SW 9177	PROMAR 200 INTERIOR WATERBASED ACRYLIC-ALKYD OR EMERALD EXTERIOR ACRYLIC LATEX PAINT: SEMI-GLOSS
~~P-2D~~	~~G~~	~~G~~	~~PAINT~~	~~SHERWIN WILLIAMS~~	~~SALTY DOG SW 9177~~	~~PRO INDUSTRIAL DTM ACRYLIC COATING~~
~~P-2E~~	~~G~~	~~G~~	~~PAINT~~	~~SHERWIN WILLIAMS~~	~~SALTY DOG SW 9177~~	~~PAINT AND PRIMER FOR AZEK PANELS: TBD~~
P-3A	G	G	PAINT	SHERWIN WILLIAMS	REAL RED SW 6868	PROMAR 200 INTERIOR WATERBASED ACRYLIC-ALKYD OR EMERALD EXTERIOR ACRYLIC LATEX PAINT: EGGSHELL
P-5A	G	G	PAINT	SHERWIN WILLIAMS	TRICORN BLACK SW 6258	PROMAR 200 INTERIOR WATERBASED ACRYLIC-ALKYD OR EMERALD EXTERIOR ACRYLIC LATEX PAINT: FLAT
NO SUBSTITUTIONS ALLOWED. REFER TO SHEET A15.1 FOR PAINTING AND PRIMER SPECIFICATIONS. PROVIDE PREMIUM GRADE PRIMERS RECOMMENDED BY PAINT MANUFACTURER FOR SUBSTRATES INDICATED AND FOR FINISH SYSTEMS SPECIFIED.						
WALL COVERING						
WC-1	G	G	BRICK PANEL	ARTIST WITH MACHINES (VINCE FAIELLA 614-623-6444)	NU STONE BRICK; SIZE: 1'-4" TALL X 7'-4" LONG PANELS	CASHWRAP & FITTING ROOM LOUNGE
WC-2	O	G	SHIPLAP	MILLWORK VENDOR	4' x 8' x 1/2" MDF SHEETS MILLED TO CREATE LOOK OF 6" TALL WOOD PLANKS - (H) OR (V) ORIENTATION	SALES
WC-3	O	G	SHIPLAP	MILLWORK VENDOR	4' x 8' x 3/8" MDF SHEETS MILLED TO CREATE LOOK OF 6" TALL WOOD PLANKS - (H) OR (V) ORIENTATION	SALES
FRP-1	G	G	WAINSCOTING (FRP)	MARLITE	WHITE-PEBBLE SURFACE P-100 WITH M370 EDGE CAP, M350 INSIDE CORNER, M360 OUTSIDE CORNER AND M365 DIVIDER	TOILET ROOM(S), MOP SINK WALL(S), DRINKING FOUNTAIN WALLS, AND HALLWAY WALLS
FLOORING						
FC-1	O	G	LUXURY VINYL TILE	MANNINGTON	6" WIDE x 48" LENGTH PLANKS COLOR: SUGAR MAPLE	SALES FLOOR; RANDOM STAGGER. APPLICATION METHOD: DIRECT GLUE-DOWN. FOLLOW MANUFACTURER'S FLOOR PREPARATION AND INSTALLATION INSTRUCTIONS. ADHESIVE TO BE SUPPLIED BY OWNER
FC-2	O	G	LUXURY VINYL TILE	MANNINGTON	6" WIDE x 36" LENGTH PLANKS STYLE: GROOVE, COLOR: LONDON FOG - C139	SALES FLOOR; RANDOM STAGGER. APPLICATION METHOD: DIRECT GLUE-DOWN. FOLLOW MANUFACTURER'S FLOOR PREPARATION AND INSTALLATION INSTRUCTIONS. ADHESIVE TO BE SUPPLIED BY OWNER
FC-3	O	G	LUXURY VINYL TILE	MANNINGTON	6" WIDE X 36" LENGTH PLANKS STYLE: GROOVE, COLOR: MIDNIGHT TWINKLE - C108	SALES FLOOR; END TO END STRIP. APPLICATION METHOD: DIRECT GLUE-DOWN. FOLLOW MANUFACTURER'S FLOOR PREPARATION AND INSTALLATION INSTRUCTIONS. ADHESIVE TO BE SUPPLIED BY OWNER
FC-4	G	G	VINYL TILE	ARMSTRONG	12"x12" STANDARD EXCELON VCT 'CLASSIC WHITE' NO. 51911 (HOME DEPOT: MODEL #51899031; SKU #921416)	NON-SALES: STOCK ROOM, HALLWAY/CORRIDOR AND TOILET ROOMS - IMPERIAL TEXTURE, 1/4 TURN INSTALLATION, CLEAN, POLISH AND WAX PRIOR TO TURNOVER. (DRITAC 6200 PREMIUM FLOORING ADHESIVE BY G.C. - NO SUBSTITUTIONS) VERIFY LL REQUIREMENT FOR WATERPROOF MEMBRANE, IF REQUIRED USE LATICRETE #9235
~~FC-5~~	~~G~~	~~G~~	~~VINYL TILE~~	~~ARMSTRONG~~	~~12"x12" STANDARD EXCELON VCT "HOT LIPS" NO. 57515 (HOME DEPOT: MODEL #57515031; SKU #1000042448)~~	~~NON-SALES: STOCK ROOM AND HALLWAY/CORRIDOR (IF ALLOWED BY CODE) AS REQUIRED BY CODE; IMPERIAL TEXTURE - CLEAR PATH AND CLEAR AREA IN FRONT OF ELECTRICAL EQUIPMENT; CLEAN, POLISH AND WAX PRIOR TO TURNOVER. (DRITAC 6200 PREMIUM FLOORING ADHESIVE BY G.C. - NO SUBSTITUTIONS)~~
~~FC-6~~	~~-~~	~~G~~	~~-~~	~~-~~	~~MALL MATCH FLOORING AT ENTRY~~	~~LEASE LINE TO CLOSURE LINE; PURCHASE DIRECTLY FROM LANDLORD~~
~~FC-7~~	~~G~~	~~G~~	~~CONCRETE~~	~~SHERWIN WILLIAMS~~	~~SEALED CONCRETE~~	~~NONSALES AREA - CONCRETE TO BE SEALED WITH H&C CLARISHIELD WATER-BASED WET LOOK CONCRETE SEALER~~
FC-8	G	G	WALK-OFF MAT	AMERICAN FLOOR MATS	SUPER BERBER RECESSED MATS, COLOR: CHARCOAL	ENTRY (REFER TO FINISH PLAN FOR SIZE)

CODE	SUPPLIED	INSTALLED	MATERIAL	MANUFACTURER	DESCRIPTION	LOCATION / NOTES
WALL BASE						
B-1	O	G	WOOD	MILLWORK VENDOR	3/4" x 5 1/4" CLEAR POPLAR	SALES FLOOR - SCRIBE TO 4" (AT HIGH POINT) PRIMED, FINISH AS PER INTERIOR ELEVATIONS
B-2	G	G	VINYL	ROPPE	4" COVE BASE; 'DARK GRAY' (HOME DEPOT: MODEL #HC40LA5P15; SKU #650756)	NON-SALES; STOCK ROOM, HALLWAY/CORRIDOR AND TOILET ROOMS
~~B-4~~	~~G~~	~~G~~	~~TILE~~	~~KAREN PEARSE GLOBAL DIRECT~~	~~12X12 PORCELAIN TILE; COLOR: RETROSPECT SNOW BLIND; FINISH: NATURAL; QUARRY CODE: 0130PRC 06 00027 S~~	~~STOREFRONT - CUT TO SIZE INDICATED; GROUT: TBD~~
~~B-5~~	~~G~~	~~G~~	~~TILE~~	~~KAREN PEARSE GLOBAL DIRECT~~	~~12X24 PORCELAIN TILE; COLOR: LOTUS - NAVY; FINISH: NATURAL; QUARRY CODE: 4249 PRC 03 00036 S~~	~~STOREFRONT - CUT TO SIZE INDICATED; GROUT: TBD~~
~~B-6~~	~~G~~	~~G~~	~~TILE~~	~~TBD~~	~~SIZE: 12"X24", COLOR: (BLACK), GROUT: TBD~~	~~STOREFRONT~~
WALL TRIMS						
T-1	O	G	WOOD	MILLWORK VENDOR	3" x 1" CLEAR POPLAR	SALES FLOOR; PRIMED BY VENDOR AND PAINTED BY G.C.
T-2	O	G	WOOD	MILLWORK VENDOR	1" x 3/4" CLEAR POPLAR	SALES FLOOR; PRIMED BY VENDOR AND PAINTED BY G.C.
~~T-5~~	~~G~~	~~G~~	~~DECORATIVE MOULDING~~	~~AZEK~~	~~6" CROWN: AZM-45~~	~~EXTERIOR STOREFRONT~~
~~T-7~~	~~G~~	~~G~~	~~DECORATIVE MOULDING~~	~~AZEK~~	~~TRIM: 5/8" THICK X 3" WIDE, FINISH: TRADITIONAL~~	~~EXTERIOR STOREFRONT~~
T-8	G	G	WOOD	N/A	MDF	FITTING ROOM LOUNGE DOOR CASING - REFER TO R/A10.1
T-9	O	G	WOOD	MILLWORK VENDOR	CROWN	FLOATING CEILING CROWN; PRIMED BY VENDOR AND PAINTED BY G.C.
T-12	G	G	WOOD	N/A	3/4" CLEAR POPLAR	BRICK WALL AND SPECIALTY TRIM - REFER TO PLAN AND DETAILS FOR WIDTH
REFER TO A/A10.1 FOR TRIM PROFILES						
MIRRORS						
M-1	G	G	MIRROR	N/A	1/4" THICK MIRROR	MIRROR, J-MOLD, MASTIC, ETC. PROVIDED AND INSTALLED BY G.C.
SPECIAL FINISHES						
SF-1	G	G	CONCRETE SKIM COAT	-	-	MAX. TOLERANCE TO 1/8" IN 12'-0" OF STORAGE SHELF TRACK INSTALL FINISH FLOOR AS NOTED OVER SF-1
~~SF-2~~	~~G~~	~~G~~	~~-~~	~~AZEK~~	~~3/4" THICK X 4'-0" WIDE X 10'-0" LONG, FINISH: TRADITIONAL~~	~~EXTERIOR STOREFRONT~~
SF-3	O	G	DECORATIVE ARCH	MILLWORK VENDOR	-	-
SF-4	O	G	TRANSOM WINDOWS	MILLWORK VENDOR	-	-
SF-5	G	G	FIBER CEMENT LAP SIDING	JAMES HARDIE	HARDIE PLANK LAP SIDING: SELECT CEDARMILL; SIZE: 7 1/4" WIDE X 12' LONG PLANKS; COLOR: ARCTIC WHITE	EXTERIOR LAP SIDING
SF-6	G	G	FIBER CEMENT TRIM BOARDS	JAMES HARDIE	HARDIE TRIM BOARDS: 4/4 RUSTIC; SIZE: 3.5" WIDE X 3/4" THICK X 12' LONG PLANKS; COLOR: ARCTIC WHITE	EXTERIOR TRIM
~~SF-9~~	~~G~~	~~G~~	~~HDF / HARDBOARD~~	~~N/A~~	~~3/16" THICK X 48" WIDE X 96" LONG~~	~~INTERIOR STOREFRONT FINISH~~
~~SF-10~~	~~G~~	~~G~~	~~THIN BRICK~~	~~BELDEN BRICK~~	~~BELDEN MODULAR THIN BRICK: POLAR WHITE CLEAR - 2 1/4" X 7 5/8" X 3/4" (MODULAR FACE SIZE); CORNERS (90° TURN) - 2 1/4" X 7 5/8" X 3 5/8" X 3/4". MORTAR: CEMEX IVORY 10-C.~~	~~GLEN-GERY THIN TECH - CLASSIC PANEL~~
SF-11	G	G	WINDOW FILM	SOLYX	SX-3140 DUSTED CRYSTAL	APPLY TO INTERIOR SURFACE OF GLASS

FINISH SCHEDULE A

OWNER:
5A LANDS' END LANE
DODGEVILLE, WI 53595

ARCHITECT / ENGINEER:
SHREMSHOCK
Shremshock Architects, Inc.
7400 W. Campus Rd. Suite 150 New Albany, OH 43054
t: 614 545 4550 | f: 614 545 4555 | shremshock.com
Gerald S. Shremshock, Architect
Timothy J. Shremshock, Architect

©2019 THE ARCHITECT / ENGINEER ASSUMES NO RESPONSIBILITY OR LIABILITY FOR THE USE OF THESE PLANS FOR ANY PROJECT OTHER THAN SPECIFICALLY AUTHORIZED BY THEM AND SIGNED AND SEALED FOR SUCH SPECIFIC LOCATION IN THE STATE, PROVINCE OR TERRITORY SHOWN ON THE SEAL. THIS BUILDING USE IS ONLY APPLICABLE IN AREAS MEETING THE STATED DESIGN CRITERIA.

LANDS' END

STORE NO: TBD

PROJECT LOCATION:
CONGRESSIONAL PLAZA
1667 ROCKVILLE PIKE
SPACE #06
ROCKVILLE, MD 20852

DESIGN TYPE: -

REVISIONS:

REQUIRED BY:		DATE
1	BRW CLIENT, LANDLORD & B.D. COMMENTS	07/19/2019

* INDICATES NO REVISION TO THIS SHEET

GENERAL NOTES, DOOR AND FINISH SCHEDULES

Professional Certification
I certify that these documents were prepared or approved by me, and that I am a duly licensed architect under the laws of the State of Maryland license number 17246, expiration date February 28, 2021.

DRAWN BY: JAW CHECKED BY: BRW/ELM/RHW

DATE ISSUED: 06/07/2019
PROJECT NO: 190148
DRAWING NO:
G1.3

PRIOR TO DEMOLITION G.C. TO CAREFULLY COORDINATE ITEMS THAT ARE TO BE RETAINED, RELOCATED OR REMOVED AND DISCARDED WITH MECHANICAL, ELECTRICAL, AND PLUMBING DRAWINGS.

ALL EXISTING ITEMS TO REMAIN UNLESS OTHERWISE NOTED

ALL INTERIOR DASHED WALLS AND FINISHES ARE TO BE REMOVED

REMOVE FLOOR COVERING AND ADHESIVE, CEILING GRID AND TILE, CEILING FIXTURES, AWNINGS, SIGNAGE, ETC. UNLESS OTHERWISE NOTED

CONCRETE MUST BE LEVEL AND CLEAN OF ANY FOREIGN MATERIALS PRIOR TO INSTALLING NEW FINISHED FLOORING. G.C. TO PERFORM MOISTURE VAPOR EMISSION TEST BEFORE INSTALLING ANY FLOORING - REFER TO SPECIFICATIONS FOR MOISTURE TEST PROCEDURES

G.C. TO FIELD VERIFY ALL DIMENSIONS

NOT USED | M

NOT USED | - | - | H

1. G.C. TO PROTECT ALL EXT'G FIREPROOFING & REPAIR AS REQUIRED TO MAINTAIN EXT'G RATING.
2. G.C. SHALL PROTECT ALL EXT'G. CONSTRUCTION DESIGNATED TO REMAIN. ANY DAMAGE INCURRED AS A RESULT OF G.C.'S FAILURE TO PROTECT THESE ITEMS SHALL BE REPAIRED OR REPLACED TO OWNER'S SATISFACTION AT THE G.C.'S SOLE EXPENSE.
3. COORDINATE ALL DEMOLITION AND REMOVALS WITH THE FULL SCOPE OF NEW WORK AS INDICATED IN THE DRAWINGS. PRIOR TO COMMENCEMENT OF THE WORK, G.C. SHALL NOTIFY THE OWNER / ARCHITECT OF ANY DISCREPANCIES FOR INTERPRETATION / DIRECTION.
4. G.C. SHALL COORDINATE WITH LANDLORD PRIOR TO COMMENCEMENT OF DEMOLITION WORK ALL PROCEDURES (E.G. SCHEDULING OF ACTIVITIES, SHUTDOWNS, ETC.) AND LOCATION OF DUMPSTER FOR DISPOSAL OF ALL REMOVED ITEMS.
5. G.C. IS REQUIRED TO CHECK IN WITH THE LL'S ON SITE PROPERTY MANAGER PRIOR TO THE START OF TENANT CONSTRUCTION. NO WORK CAN COMMENCE UNTIL A PRECONSTRUCTION MEETING IS HELD.
6. ANY DAMAGE TO LL'S PROPERTY DURING TENANT DEMOLITION OR CONSTRUCTION (MALL FLOORING, BULKHEAD, NEUTRAL PIERS, ETC.) WILL BE REPAIRED PER MALL SPECIFICATIONS, AT G.C.'S EXPENSE.
7. ANY EXT'G EQUIPMENT OR COMPONENT IN OR PERTAINING TO THE PREMISES THAT IS BEING ABANDONED MUST BE DEMOLISHED COMPLETELY AND PROPERLY REMOVED FROM THE PREMISES.
8. ALL ABOVE GROUND UTILITY LINES NOT TO BE RE-USED MUST BE REMOVED TO POINT OF ORIGIN. ALL UNDER SLAB UTILITY LINES TO BE CUT, CAPPED AND SEALED PER CODE.
9. ALL ROOF MOUNTED EQUIPMENT ABOVE THE LEASED PREMISES NOT TO BE RE-USED MUST BE REMOVED BY G.C. AT G.C.'S EXPENSE. ROOF MUST BE PROPERLY PATCHED BY MALL REQUIRED ROOFER. ROOF CURBS MUST BE REMOVED AND ROOF PATCHED - DO NOT CAP. COORDINATE ALL WORK WITH MALL OPERATIONS DIRECTOR.
10. G.C. SHALL COORDINATE WORK PERFORMED BY OTHER CONTRACTORS. ANY DISCREPANCIES SHALL BE BROUGHT TO THE OWNER'S ATTENTION BEFORE PROCEEDING WITH WORK.
11. GENERAL CONTRACTOR SHALL VISIT JOB SITE AND BE FAMILIAR WITH LANDLORD'S REQUIREMENTS AND EXISTING CONDITIONS. NO ALLOWANCE WILL BE MADE FOR EXTRAS DUE TO CONTRACTOR'S FAILURE TO VISIT THE JOB SITE AND/OR FAILURE TO PREDETERMINE ALL REQUIREMENTS IMPOSED BY THE LANDLORD, EXISTING CONDITIONS OR OTHER AUTHORITIES.
12. COORDINATE ALL DEMOLITION EFFORTS WITH THE MALL OPERATIONS MANAGER.
13. NO CONDUIT, SPRINKLER, DUCTWORK, WIRING, PLUMBING ETC. SHALL BE LEFT STRANDED IN THE SPACE. ALL OF THE ABOVE MUST BE CONNECTED TO TENANTS WORKING SYSTEMS OR ELSE DEMOLISHED AND REMOVED.
14. CONTACT MALL OPERATIONS MANAGER BEFORE REMOVING ANY CONDUIT, WIRES, OR CABLES, IF THE ORIGIN CANNOT BE DETERMINED FROM WITHIN THE TENANT DEMISED SPACE.
15. CONTACT MALL OPERATIONS REGARDING TRASH DUMPSTER RENTAL AND SITE LOCATIONS.
16. AFTER ENTIRE DEMOLITION TENANT G.C. TO CONSULT WITH LANDS' END PROJECT MANAGER PRIOR TO COMMENCEMENT OF CONSTRUCTION.

DEMOLITION / LEASE PLAN | D

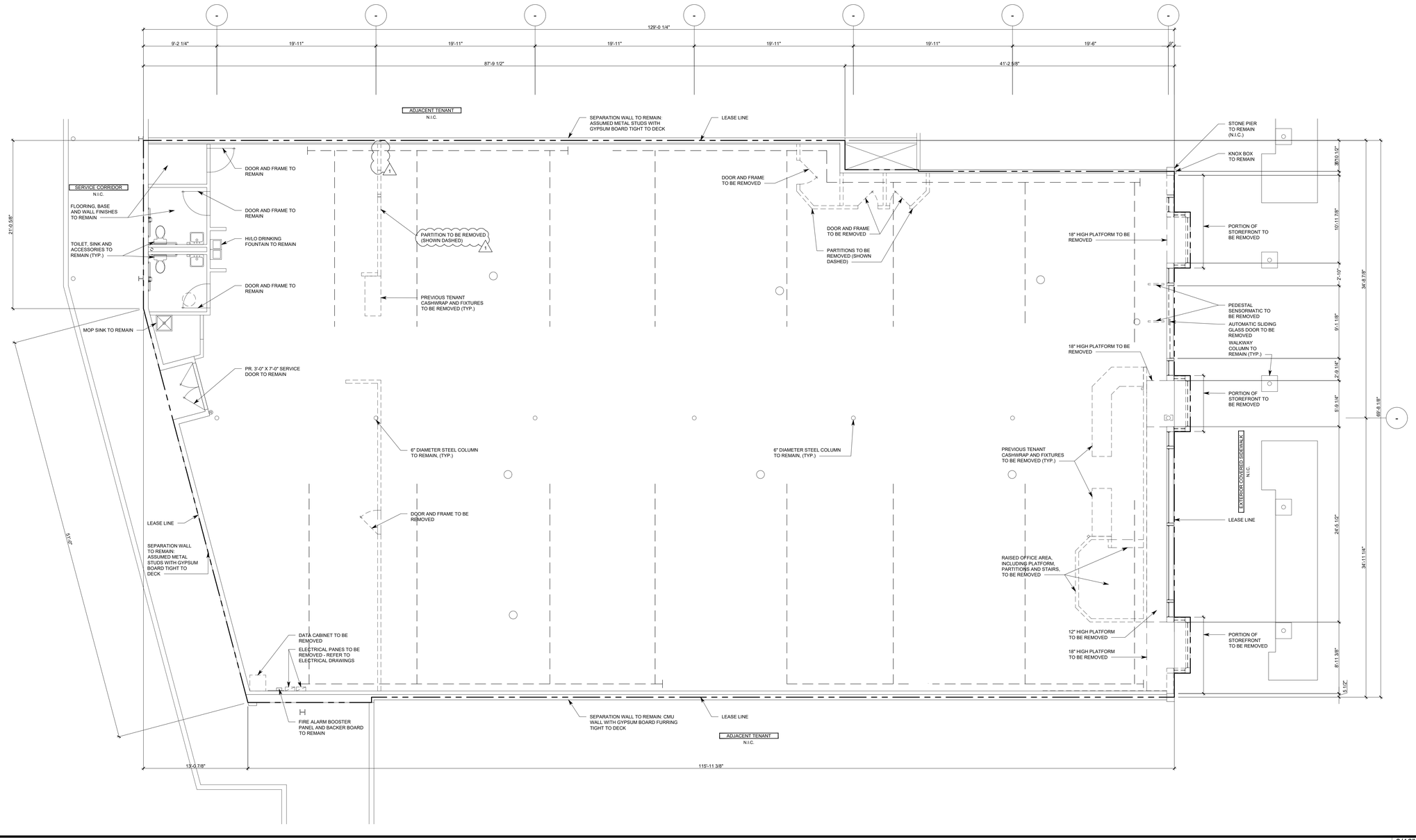

DEMOLITION / LEASE PLAN | 3/16" = 1'-0" | - | A

OWNER:

5A LANDS' END LANE
DODGEVILLE, WI 53595

ARCHITECT / ENGINEER:

SHREMSHOCK
Shremshock Architects, Inc.
7400 W. Campus Rd. Suite 150 New Albany, OH 43054
t: 614 545-4550 | f: 614 545-4555 | shremshock.com
Gerald S. Shremshock, Architect
Timothy J. Shremshock, Architect

©2019 THE ARCHITECT / ENGINEER ASSUMES NO RESPONSIBILITY FOR THE USE OF THESE PLANS OR THESE PLANS FOR ANY PROJECT OTHER THAN SPECIFICALLY AUTHORIZED BY THEM AND SIGNED AND SEALED FOR SUCH SPECIFIC LOCATION IN THE STATE, PROVINCE OR TERRITORY SHOWN ON THE SEAL. THIS BUILDING USE IS ONLY APPLICABLE IN AREAS MEETING THE STATED DESIGN CRITERIA.

LANDS' END

STORE NO:
TBD

PROJECT LOCATION:
CONGRESSIONAL PLAZA
1667 ROCKVILLE PIKE
SPACE #06
ROCKVILLE, MD 20852

DESIGN TYPE:
-

REVISIONS:

REQUIRED BY:	DATE
1. CLT CLIENT, LANDLORD & B.D. COMMENTS	07/19/2019

* INDICATES NO REVISION TO THIS SHEET

Professional Certification

I certify that these documents were prepared or approved by me, and that I am a duly licensed architect under the laws of the State of Maryland license number 17246, expiration date February 28, 2021.

DEMOLITION/ LEASE PLAN

DRAWN BY: JAW | CHECKED BY: BRW/ELM/RHW

DATE ISSUED: 06/07/2019
PROJECT NO: 190148

DRAWING NO:
AD.1

PRIOR TO DEMOLITION G.C. TO CAREFULLY COORDINATE ITEMS THAT ARE TO BE RETAINED, RELOCATED OR REMOVED AND DISCARDED WITH MECHANICAL, ELECTRICAL, AND PLUMBING DRAWINGS.

ALL EXISTING ITEMS TO REMAIN UNLESS OTHERWISE NOTED

ALL INTERIOR DASHED WALLS AND FINISHES ARE TO BE REMOVED

REMOVE FLOOR COVERING AND ADHESIVE, CEILING GRID AND TILE, CEILING FIXTURES, AWNINGS, SIGNAGE, ETC. UNLESS OTHERWISE NOTED

CONCRETE MUST BE LEVEL AND CLEAN OF ANY FOREIGN MATERIALS PRIOR TO INSTALLING NEW FINISHED FLOORING. G.C. TO PERFORM MOISTURE VAPOR EMISSION TEST BEFORE INSTALLING ANY FLOORING - REFER TO SPECIFICATIONS FOR MOISTURE TEST PROCEDURES

G.C. TO FIELD VERIFY ALL DIMENSIONS

NOT USED

D

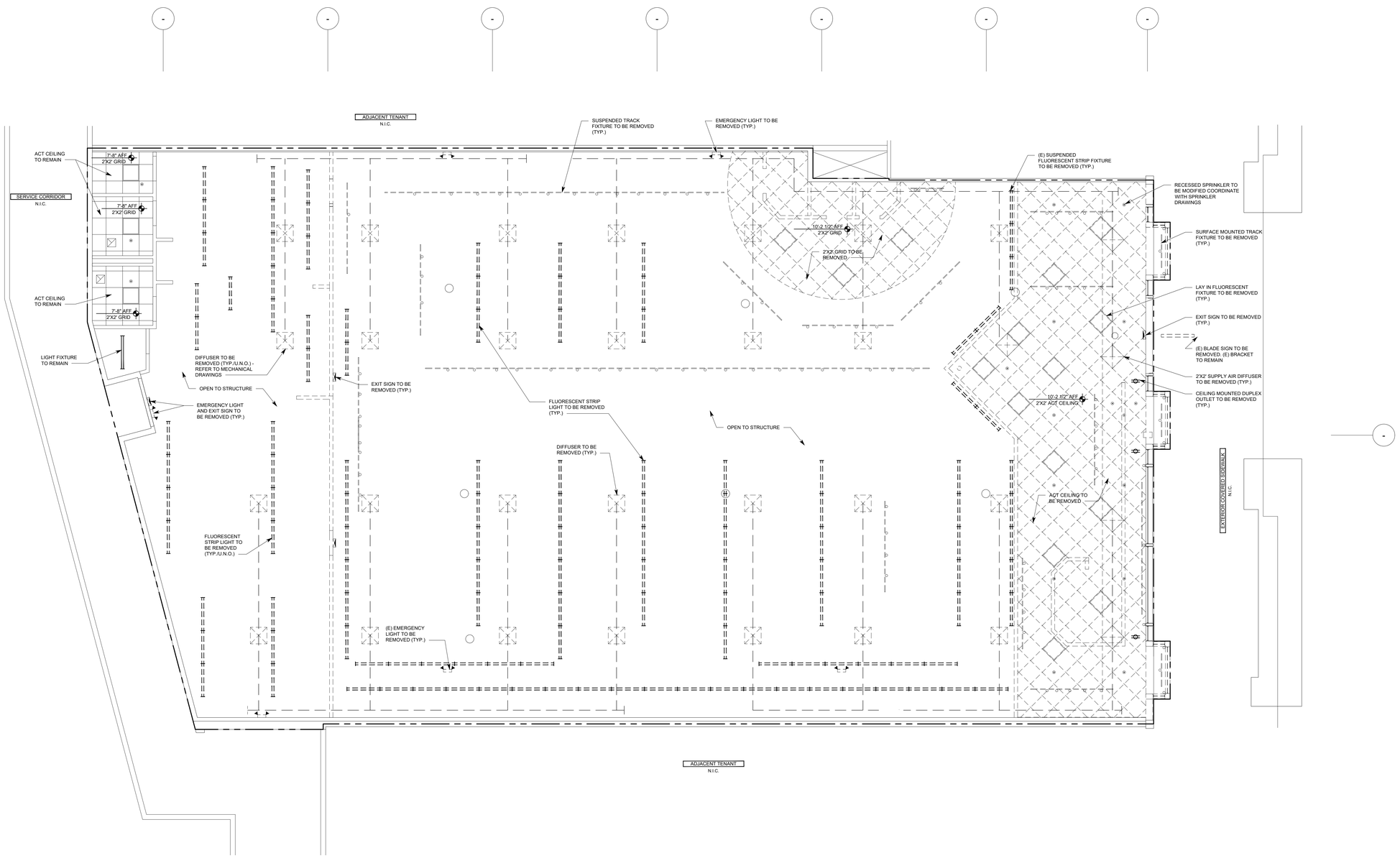

DEMOLITION / LEASE PLAN

3/16" = 1'-0"
-

A

OWNER:

5A LANDS' END LANE
DODGEVILLE, WI 53595

ARCHITECT / ENGINEER:

SHREMSHOCK
Shremshock Architects, Inc.
7400 W. Campus Rd. Suite 150 New Albany, OH 43054
t: 614 545-4550 | f: 614 545-4555 | shremshock.com
Gerald S. Shremshock, Architect
Timothy J. Shremshock, Architect

©2019 THE ARCHITECT / ENGINEER ASSUMES NO RESPONSIBILITY FOR THE USE OF THESE PLANS FOR ANY PROJECT OTHER THAN SPECIFICALLY AUTHORIZED BY THEM AND SIGNED AND SEALED FOR SUCH SPECIFIC LOCATION IN THE STATE, PROVINCE OR TERRITORY SHOWN ON THE SEAL. THIS BUILDING USE IS ONLY APPLICABLE IN AREAS MEETING THE STATED DESIGN CRITERIA.

LANDS' END

STORE NO:
TBD

PROJECT LOCATION:
CONGRESSIONAL PLAZA
1667 ROCKVILLE PIKE
SPACE #06
ROCKVILLE, MD 20852

DESIGN TYPE:
-

REVISIONS:

REQUIRED BY:		DATE
1	CLIENT, LANDLORD & B.D. COMMENTS	07/19/2019

* INDICATES NO REVISION TO THIS SHEET

Professional Certification

I certify that these documents were prepared or approved by me, and that I am a duly licensed architect under the laws of the State of Maryland license number 17246, expiration date February 28, 2021 .

REFLECTED CEILING DEMOLITION / LEASE PLAN

DRAWN BY: JAW CHECKED BY: BRW/EL M/RHW

DATE ISSUED: 06/07/2019
PROJECT NO: 190148

DRAWING NO:
AD.2

PRIOR TO DEMOLITION G.C. TO CAREFULLY COORDINATE ITEMS THAT ARE TO BE RETAINED, RELOCATED OR REMOVED AND DISCARDED WITH MECHANICAL, ELECTRICAL, AND PLUMBING DRAWINGS.

ALL EXISTING ITEMS TO REMAIN UNLESS OTHERWISE NOTED

ALL INTERIOR DASHED WALLS AND FINISHES ARE TO BE REMOVED

REMOVE FLOOR COVERING AND ADHESIVE, CEILING GRID AND TILE, CEILING FIXTURES, AWNINGS, SIGNAGE, ETC. UNLESS OTHERWISE NOTED

CONCRETE MUST BE LEVEL AND CLEAN OF ANY FOREIGN MATERIALS PRIOR TO INSTALLING NEW FINISHED FLOORING. G.C. TO PERFORM MOISTURE VAPOR EMISSION TEST BEFORE INSTALLING ANY FLOORING - REFER TO SPECIFICATIONS FOR MOISTURE TEST PROCEDURES

G.C. TO FIELD VERIFY ALL DIMENSIONS

NOT USED

D

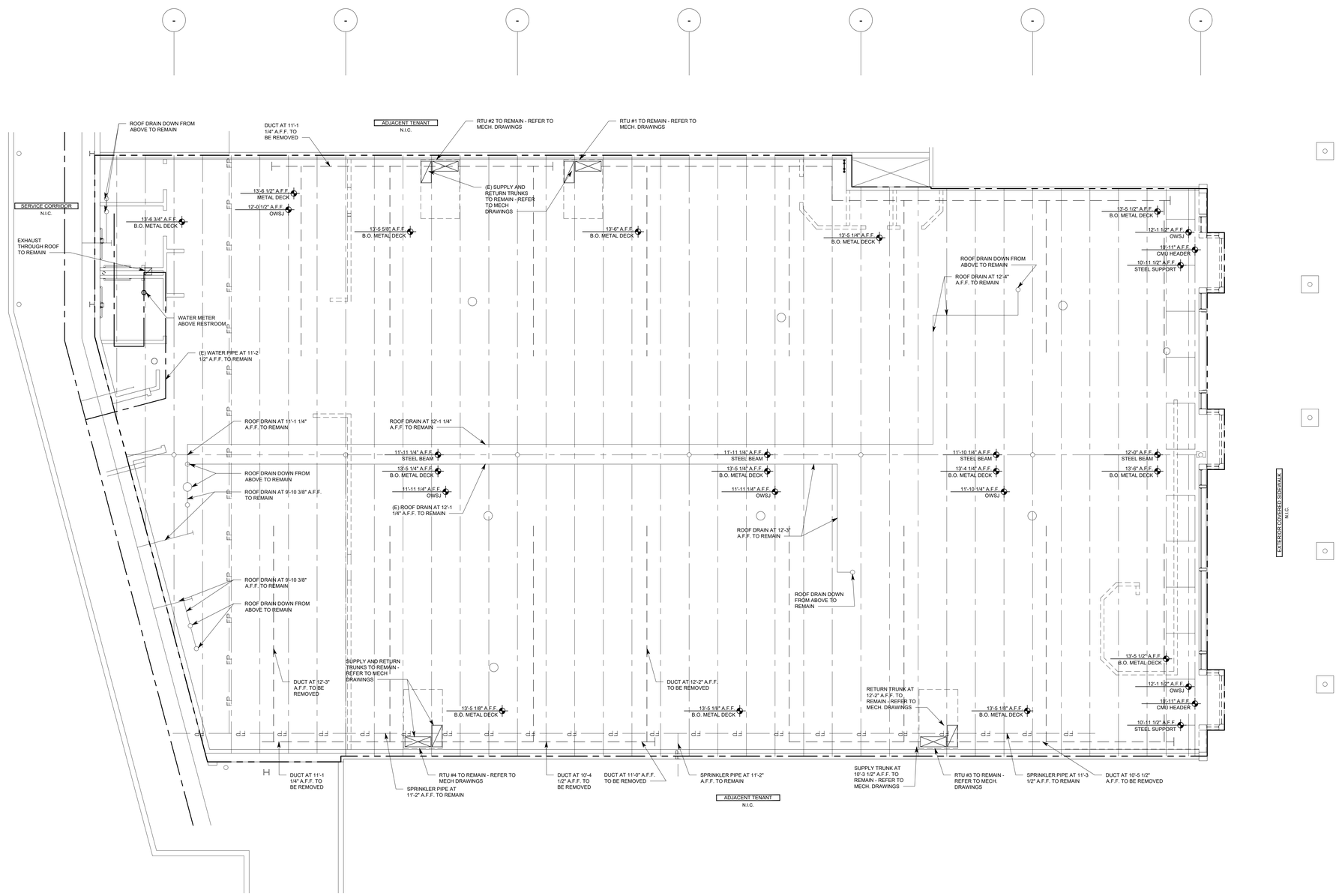

DEMOLITION / LEASE PLAN

3/16" = 1'-0"

A

OWNER:

5A LANDS' END LANE
DODGEVILLE, WI 53595

ARCHITECT / ENGINEER:

SHREMSHOCK
Shremshock Architects, Inc.
7400 W. Campus Rd. Suite 150 New Albany, OH 43054
t: 614 545 4550 | f: 614 545 4555 | shremshock.com
Gerald S. Shremshock, Architect
Timothy J. Shremshock, Architect

©2019 THE ARCHITECT / ENGINEER ASSUMES NO RESPONSIBILITY FOR THE USE OF THESE PLANS OR THESE PLANS FOR ANY PROJECT OTHER THAN SPECIFICALLY AUTHORIZED BY THEM AND SIGNED AND SEALED FOR SUCH SPECIFIC LOCATION IN THE STATE, PROVINCE OR TERRITORY SHOWN ON THE SEAL. THIS BUILDING USE IS ONLY APPLICABLE IN AREAS MEETING THE STATED DESIGN CRITERIA.

LANDS' END

STORE NO:
TBD

PROJECT LOCATION:
CONGRESSIONAL PLAZA
1667 ROCKVILLE PIKE
SPACE #06
ROCKVILLE, MD 20852

DESIGN TYPE:
-

REVISIONS:

REQUIRED BY:		DATE
1	CLIENT, LANDLORD & B.O. COMMENTS	07/19/2019

* INDICATES NO REVISION TO THIS SHEET

Professional Certification

I certify that these documents were prepared or approved by me, and that I am a duly licensed architect under the laws of the State of Maryland license number 17246, expiration date February 28, 2021.

ABOVE CEILING DEMOLITION / LEASE PLAN

DRAWN BY: JAW CHECKED BY: BRW/ELM/RHW

DATE ISSUED: 06/07/2019
PROJECT NO: 190148
DRAWING NO:
AD.3

ELEVATION SHOWN IS A REPRESENTATION OF INTENT. ACTUAL GRAPHIC ARTWORK IS TO BE SUBMITTED TO LANDLORD FOR REVIEW BY LANDS' END FOR APPROVAL PRIOR TO PRODUCTION AND INSTALLATION.

CONFIRM HEIGHT FOR OWNER'S GRAPHICS PRIOR TO CONSTRUCTION.

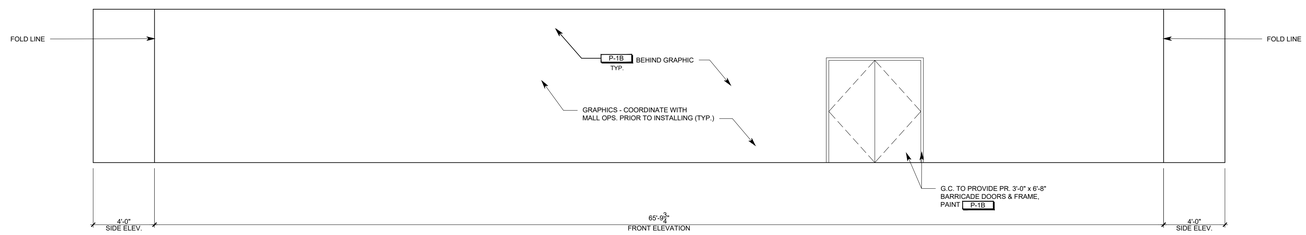

NOT USED

1/4" = 1'-0" | - | R

BARRICADE ELEVATION

1/4" = 1'-0" | - | C

NOT USED

U

NOT USED

P

1. TENANT G.C. SHALL COORDINATE BARRICADE REQUIREMENTS, LOCATION AND INSTALLATION OF CONSTRUCTION BARRICADE WITH MALL OPERATIONS PRIOR TO COMMENCEMENT OF WORK.
2. G.C. TO CONSULT WITH MALL REPRESENTATIVE FOR HOURS IN WHICH WORK ON BARRICADE CAN OCCUR.
3. G.C. SHALL CONSTRUCT A TEMPORARY BARRICADE(S) AS INDICATED. INSTALL BARRICADE 'LID' AS APPROPRIATE TO SITE CONDITION, WEATHER AND CONSTRUCTION ACCESS, BACK TO EXISTING BULKHEAD. BARRICADES ARE TO BE ADEQUATELY SECURED AND BRACED TO EXISTING BULKHEAD FRAMING FOR LATERAL STABILITY AND MUST BE STRUCTURALLY SOUND.
4. BARRICADE TO BE PAINTED AND/OR SIZED ACCORDINGLY IN PREPARATION FOR BARRICADE GRAPHICS, (BY TENANT).
5. BARRICADE IS TO BE 100% COMPLETE AND READY FOR GRAPHICS TO BE INSTALLED NOT MORE THAN TWO DAYS AFTER CONSTRUCTION START. G.C. TO CONTACT OWNERS REPRESENTATIVE UPON COMPLETION TO COORDINATE GRAPHICS INSTALLATION.
6. G.C. IS RESPONSIBLE FOR MAINTAINING BARRICADE DURING CONSTRUCTION.
7. REMOVE BARRICADE WHEN 100% OF STOREFRONT IS COMPLETE ON THE EVENING BEFORE G.C.'S PUNCHLIST IS COMPLETED, PRIOR TO OWNER VERIFICATION, AND AFTER LANDLORD APPROVAL IS RECEIVED. CARE IS TO BE TAKEN WHEN DISASSEMBLING AND REMOVING BARRICADE. G.C. IS TO RESTORE NEUTRAL PIER(S), MALL FLOORING/SIDEWALK AND BULKHEAD TO A 'LIKE NEW' CONDITION AND FINISH.
8. BARRICADE CONSTRUCTION SHALL NOT BE USED FOR STORAGE OR SUPPORT OF ANY MATERIALS. DO NOT LEAN ANY ITEMS AGAINST BARRICADE WALLS.
9. AFTER BARRICADE REMOVAL, IF REQUIRED BY MALL, G.C. TO BLOCK WINDOWS WITH LANDLORD APPROVED MATERIALS. CONFIRM PROCESS WITH LANDLORD.

BARRICADE NOTES

T

NOT USED

N

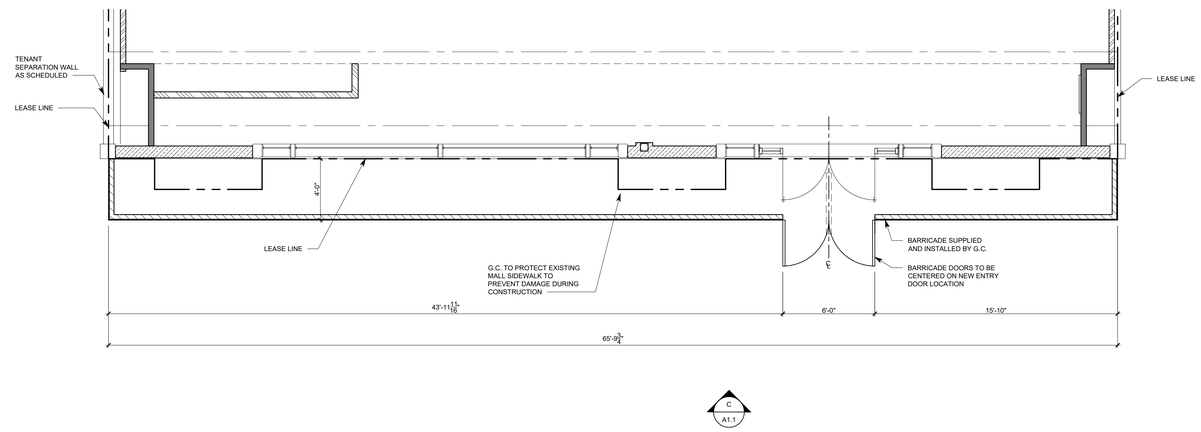

AT A MINIMUM, G.C. SHALL VERIFY AND MAINTAIN THE CODE REQUIRED SIDEWALK WIDTH AT THE CONSTRUCTION BARRICADE. BARRICADES SHALL NOT REDUCE THE CLEAR WIDTH OF SIDEWALKS TO LESS THAN 3'-0"

BARRICADE PLAN

1/4" = 1'-0" | - | A

OWNER:

5A LANDS' END LANE
DODGEVILLE, WI 53595

ARCHITECT / ENGINEER:

SHREMSHOCK
Shremshock Architects, Inc.
7400 W. Campus Rd. Suite 150 New Albany, OH 43054
t: 614 545-4550 | f: 614 545-4555 | shremshock.com
Gerald S. Shremshock, Architect
Timothy J. Shremshock, Architect

©2019 THE ARCHITECT / ENGINEER ASSUMES NO RESPONSIBILITY FOR THE USE OF THESE PLANS FOR ANY PROJECT OTHER THAN SPECIFICALLY AUTHORIZED BY THEM AND SIGNED AND SEALED FOR SUCH SPECIFIC LOCATION IN THE STATE, PROVINCE OR TERRITORY SHOWN ON THE SEAL. THIS BUILDING USE IS ONLY APPLICABLE IN AREAS MEETING THE STATED DESIGN CRITERIA.

LANDS' END

STORE NO:
TBD

PROJECT LOCATION:
CONGRESSIONAL PLAZA
1667 ROCKVILLE PIKE
SPACE #06
ROCKVILLE, MD 20852

DESIGN TYPE:
-

REVISIONS:

REQUIRED BY:		DATE
1	CLIENT, LANDLORD & B.D. COMMENTS	07/19/2019

* INDICATES NO REVISION TO THIS SHEET

Professional Certification

I certify that these documents were prepared or approved by me, and that I am a duly licensed architect under the laws of the State of Maryland license number 17246, **expiration date** February 28, 2021.

BARRICADE PLAN AND DETAILS

DRAWN BY: JAW CHECKED BY: BRW/ELM/RHW

DATE ISSUED: 06/07/2019

PROJECT NO: 190148

DRAWING NO:
A1.1

INDICATES WALL TYPE

REFER TO R/A11.2 FOR STUD SIZE MATRIX

X / X.XX — INDICATES WALL SECTION DETAIL

0 — A/A11.1 — EXISTING TENANT SEPARATION OR CORRIDOR WALL TO REMAIN: G.C. TO PROVIDE FIRE RATING (1-HR) - G.C. TO INSTALL NEW 5/8" TYPE 'X' GYP. BD. - G.C. TO FIRE SAFE ALL VOIDS, FIRE TAPE AND CAULK AS REQUIRED. NOTE: IF TENANT SEPARATION WALLS STOP SHORT OF DECK ABOVE G.C. TO INSTALL 2"X4" WELDED WIRE MESH FROM INSIDE TENANT SEPARATION WALL TO DECK ABOVE. G.C. TO ENSURE WELDED WIRE MESH IS SECURELY ATTACHED

0 — EXISTING PARTITION TO REMAIN. G.C. TO PATCH AND REPAIR AS REQUIRED.

1 — C/A11.1 — SALES AREA PARTITION: G.C. TO PROVIDE 3 5/8" (OR 6") 1 5/8" FLANGE METAL STUDS AT 16" O.C. TO 12'-0" A.F.F. - INSTALL 5/8" GYP. BD. TO 6" ABOVE CEILING ON ONE OR BOTH SIDES - PROVIDE F.R.T. BLOCKING AS REQUIRED.

2 — B/A11.1 — FULL HEIGHT PARTITION: 3 5/8", 1 5/8" FLANGE METAL STUDS AT 16" O.C. TO UNDERSIDE OF DECK ABOVE - INSTALL 5/8" GYP. BD. TO GYP. BD. CEILING, 6" ABOVE LAY-IN CEILING OR TO DECK ABOVE ON ONE OR BOTH SIDES AS NECESSARY - PROVIDE F.R.T. BLOCKING AS REQUIRED

3 — C/A11.1 SIM. — ~~TOILET ROOM PARTITION: 3 5/8", 1 5/8" FLANGE METAL STUDS AT 16" O.C. TO UNDERSIDE OF DECK ABOVE - INSTALL GYP BD. TO 12'-0" A.F.F. BOTH SIDES - USE WATER RESISTANT GYP. BD. ON TOILET ROOM SIDE~~

4 — A2/A11.4 — ~~TOILET ROOM PARTITION: 3 5/8", 1 5/8" FLANGE METAL STUDS AT 16" O.C. TO UNDERSIDE OF PLATFORM ABOVE - INSTALL 5/8" WATER RESISTANT GYP. BD. ON TOILET ROOM SIDE~~

5 — C/A11.1 SIM. — ~~PLUMBING PARTITION: 3 5/8", 1 5/8" FLANGE METAL STUDS AT 16" O.C. - INSTALL WATER RESISTANT GYP. BD. ON EXPOSED TENANT SIDE(S) TO GYP. BD. CEILING, AND ABOVE PLATFORM TO 12'-0" A.F.F. - INSTALL 5/8" WATER RESISTANT GYP. BD. ON TOILET ROOM SIDE~~

6 — C/A11.1 SIM. — NON-SALES PARTITION: 3 5/8", 1 5/8" FLANGE METAL STUDS AT 16" O.C. - INSTALL 5/8" TYPE 'X' GYP. BD. ON BOTH SIDES TO 12'-0" A.F.F.

7 — G/A11.1 — ~~PARTIAL HEIGHT PARTITION: 3 5/8", 1 5/8" FLANGE METAL STUDS AT 16" O.C. - G.C. TO INSTALL 5/8" GYP. BD. BOTH SIDES AND TOP OF WALL. TOP OF WALL AT 7'-10" A.F.F.~~

8 — F/A11.1 — FURRING PARTITION: 3 5/8", 1 5/8" FLANGE METAL STUDS AT 16" O.C. G.C. TO INSTALL 5/8" GYP. BD. ON EXPOSED SIDE TO DECK ABOVE OR TO 6" ABOVE CEILING. ANCHOR STUDS TO TENANT SEPARATION WALL AT MIDHEIGHT, TOP & BOTTOM (FOR LATERAL BRACING)

9 — E/A11.1 — ~~EXISTING PARTITION TO REMAIN: EXTEND WALL STUDS TO DECK WITH 3 5/8" OR 6", 1 5/8" FLANGE METAL STUDS AT 16" O.C. TO UNDERSIDE OF DECK ABOVE (DOUBLED @ 4'-0" O.C.) TO MATCH SPACING OF EXISTING. LAP NEW STUDS W/EXISTING. INSTALL 5/8" GYP. BD. TO DECK ABOVE ON BOTH SIDES AS NECESSARY. PROVIDE F.R.T. BLOCKING AS REQUIRED.~~

10 — E/A11.1 — 2 HR. RATED WALL: 3 5/8", 1 5/8" FLANGE METAL STUDS AT 16" O.C. TO DECK ABOVE - G.C. TO INSTALL (2) LAYERS 5/8" TYPE 'X' GYP. BD. FULL HEIGHT TO DECK ABOVE TO CREATE 2 HR. FIRE RATED ASSEMBLY - FIRE SAFE, FIRE TAPE AND CAULK AS REQUIRED (UL #U411). REFER TO T/A11.1 FOR PENETRATION DETAIL. (1)

12 — STOREFRONT CONSTRUCTION: REFER TO STOREFRONT SHEETS FOR ADDITIONAL INFORMATION.

13 — PARTIAL HEIGHT SALES PARTITION (T-WALL): REFER TO SHEET A10.1 / A10.1a FOR ADDITIONAL INFORMATION.

14 — PARTIAL HEIGHT SALES PARTITION (AT STOREFRONT): REFER TO SHEET A11.8 FOR ADDITIONAL INFORMATION.

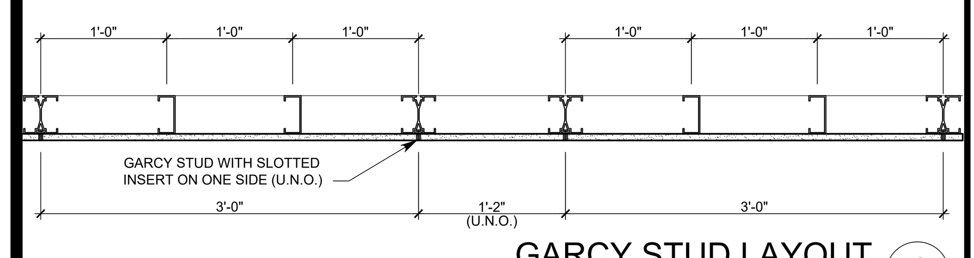

GARCY STUD LAYOUT (1)

@ WALLS W/ STANDARDS 1 2 8

PARTITION LEGEND (V)

#	DESCRIPTION
1	LEASE LINE
2	NEW AND EXISTING STOREFRONT SYSTEM - REFER TO A8.1
3	G.C. TO PRESERVE AND PROTECT EXISTING BUILDING CONSTRUCTION, NEUTRAL PIERS AND ADJACENT TENANT CONSTRUCTION, REPAIR AS NEEDED, AND FINISH TO 'LIKE NEW' CONDITIONS PER BUILDING FINISHES
4	EXISTING BUILDING COLUMN TO REMAIN. G.C. TO PROTECT DURING CONSTRUCTION AND MAINTAIN ANY RATING
5	CONCRETE MUST BE LEVEL AND CLEAN OF ANY FOREIGN MATERIALS PRIOR TO INSTALLING NEW FINISHED FLOORING. G.C. TO PERFORM MOISTURE VAPOR EMISSION TEST BEFORE INSTALLING ANY FLOORING - REFER TO SPECIFICATIONS FOR MOISTURE TEST PROCEDURES
6	PORTABLE FIRE EXTINGUISHER. G.C. TO PROVIDE SOLID F.R.T. WOOD BLOCKING. G.C. TO COORDINATE FINAL LOCATION WITH LOCAL FIRE OFFICIAL BEFORE INSTALLATION
7	ACCESSIBLE CASHWRAP - REFER TO SHEET A10.4
8	BACKWRAP - REFER TO SHEET A10.4
9	ELECTRICAL EQUIPMENT AND TELEPHONE BOARD - REFER TO ELECTRICAL DRAWINGS
10	3'-0" CLEAR FLOOR SPACE IN FRONT OF ELECTRICAL EQUIPMENT
11	PLAN TUBE - SEE DETAIL F/A14.1
12	~~TRENCHING FOR NEW ELECTRICAL & DATA CIRCUITS TO CASHWRAP - LOCATION TO BE CONFIRMED & COORDINATED WITH CASHWRAP SHOP DRAWINGS~~
13	(E) PLUMBING FIXTURES
14	(E) FLOOR MOUNTED SERVICE SINK - CLEAN TO 'LIKE NEW' CONDITION AND REPAIR TO PROPER WORKING ORDER - G.C. TO CAULK AT MOP SINK AND ADJACENT SURFACES FOR WATER TIGHT CONDITION
15	(E) HI/LO DRINKING FOUNTAIN
16	~~G.C. TO REMOVE (E) GYP. BD., INSTALL SOUND ATTENUATION INSULATION IN TOILET ROOM PARTITIONS AND REPAIR WALL PER WALL TYPE~~
17	~~PLATFORM ABOVE TOILET ROOM. SEE DETAIL A/A11.4~~
18	~~LIGHT GAUGE HEADER FOR PLATFORM STRUCTURAL SUPPORT. G.C. TO USE (2) 6" 16 GA. STUDS WITH WEB STIFFENERS @ EACH END (600S162-54) AND 3-5/8" 16 GA. (362T162-54) TRACK TOP & BOT.~~
19	~~5/8" WATER RESISTANT GYPSUM BOARD FROM TOP OF FINISH FLOOR TO THE CEILING ABOVE. EXTEND TO 12'-0" OR TOP OF PLATFORM BEHIND DRINKING FOUNTAIN WHERE APPLICABLE.~~
20	ALIGN WALLS
21	EMPLOYEE LOCKERS. G.C. TO MECHANICALLY FASTENED TO WALL
22	REFRIGERATOR AND MICROWAVE - REFER TO ELECTRICAL DRAWINGS
23	BREAK AREA - REFER TO D/A14.1
24	MANAGER'S DESK - REFER TO SHEET B/A14.1
25	2"x2"x48" METAL CORNER GUARDS MOUNTED AT TOP OF BASE- NON SALES AREA 16 GA. GALVANIZED, FASTEN WITH SILICONE, CAULK AT EXPOSED EDGES- REFER TO S/A14.1
26	G.C. TO PROVIDE CONTINUOUS 1X6 F.R.T. WOOD FURRING FOR PIPP SHELVING. CENTERLINE OF BLOCKING TO BE MOUNTED AT 7'-10" A.F.F. SECURE FURRING TO WALL STUDS WITH (3) #12 X 2½" LONG STEEL SCREWS @ EACH STUD LOCATION. (IF WALL IS CONCRETE BLOCK, USE HILTI HIT HY20 1/2" DIA. X 6" EMBEDMENT @ 16" O.C.-STAGGERED) SECURE EACH LEG OF SHELVING TO FURRING WITH (2) #12 X 2" LONG STEEL HEX HEAD SCREWS - REFER TO T/A14.1 FOR ANCHORING DETAILS
27	MOBILE SHELVING - REFER TO VENDOR SHOP DRAWINGS & SHEET A14.1
28	ALL EXPOSED SECTIONS OF MOBILE SHELVING TO RECEIVE FULL-HEIGHT PEG BOARD
29	FIXED SHELVING - REFER TO VENDOR SHOP DRAWINGS & M/A14.1
30	DOOR BUZZER - REFER TO ELECTRICAL DRAWINGS - MOUNT AT 48" A.F.F.
31	(N) BLADE SIGN SUPPLIED & INSTALLED ON EXISTING BRACKET BY OWNER'S SIGN VENDOR. REFER TO DETAIL L/A8.4.
32	SECURITY SYSTEM KEYPAD AT 48" A.F.F. - REFER TO ELECTRICAL DRAWINGS
33	~~INSTALL R-13 BATT INSULATION IN WALL~~
34	~~PROVIDE ACCESS PANEL FOR (E) CLEAN OUT. VERIFY LOCATION IN FIELD.~~
35	G.C. TO INSTALL SIGN STATING 'NOT AN EXIT'
36	RECEIVING DESK - REFER TO C/A14.1
37	~~(E) LANDLORD WATER SUPPLY LINE TO REMAIN~~
38	~~CENTERLINE OF ENTRY~~
39	~~STREET ADDRESS TO BE DISPLAYED ON EXTERIOR SIDE OF SERVICE DOOR - COORDINATE WITH LOCAL JURISDICTION~~
40	~~EXISTING RATED WALL TO RECEIVE LETTERING OF 1/2" OR LARGER STATING "FIRE AND/OR SMOKE BARRIER - PROTECT ALL OPENINGS" AT MINIMUM OF EVERY 30'-0" ABOVE CEILING~~
41	~~PROVIDE ACCESS PANEL FOR EXISTING CLEANOUT~~
42	~~(E) EXPANSION JOINT IN SLAB (ASSUMED)~~
43	BOX STAGING AREA
44	~~REMOVE (E) GYP. BD. AND INSTALL GARCY STUDS PER DETAIL V1/A2.1. REFINISH WALL WITH 5/8" TYPE 'X' GYP. BD.~~
45	SALES FLOOR MIRROR - INSTALL PER DETAIL P/A10.2
46	~~ALIGN FACE OF COLUMN WRAP WITH FACE OF SOFFIT ABOVE~~
47	~~INFILL OPENING AND FRAME FOR NEW DOOR~~
48	~~NEW 5/8" TYPE 'X' GYPSUM BOARD OVER EXISTING METAL FRAMING AS REQUIRED.~~
49	CCTV EQUIPMENT - COORDINATE WITH VENDOR SHOP DRAWINGS AND REFER TO ELECTRICAL DRAWINGS
50	GARCY STUD WITH SLOTTED INSERTS ON BOTH SIDES.
51	NETWORK RACK ON 4'-0" X 4'-0" X 3/4" PLYWOOD BACKER BOARD MOUNTED 4'-0" A.F.F. (PAINT TO MATCH ADJACENT WALL) - REFER TO ELECTRICAL DRAWINGS

CONSTRUCTION PLAN CODED NOTES (#) (T)

DIMENSION NOTE:
ALL WALL DIMENSIONS ARE TO THE FACE OF FINISH GYP. BD. OR THE FACE OF BLOCKING REQUIRED FOR FIXTURE INSTALLATION. U.N.O.

TENANT SEPARATION WALLS ARE NOT STRUCTURAL:
G.C. TO PROVIDE ALL ADDITIONAL IN-WALL BLOCKING OR SUPPORT AS REQUIRED AND AS DETAILED IN THIS SET.

NOTE:
G.C. TO FIELD VERIFY ALL DIMENSIONS AND SITE CONDITIONS PRIOR TO COMMENCEMENT OF WORK. REPORT ANY DISCREPANCIES TO OWNER'S P.M.

NOTE:
REFER TO SHEET A14.1 FOR ALL FOR PIPP SHELVING DETAILS

NOTE:
(FE) INDICATES FIRE EXTINGUISHER WITH RATING OF 3A/40BC (1) LOCATED SO THAT MAX. DISTANCE TO THEM IS NOT MORE THAN 75'. COORDINATE EXACT LOCATIONS WITH OWNER'S C.M. AND FIRE MARSHAL.

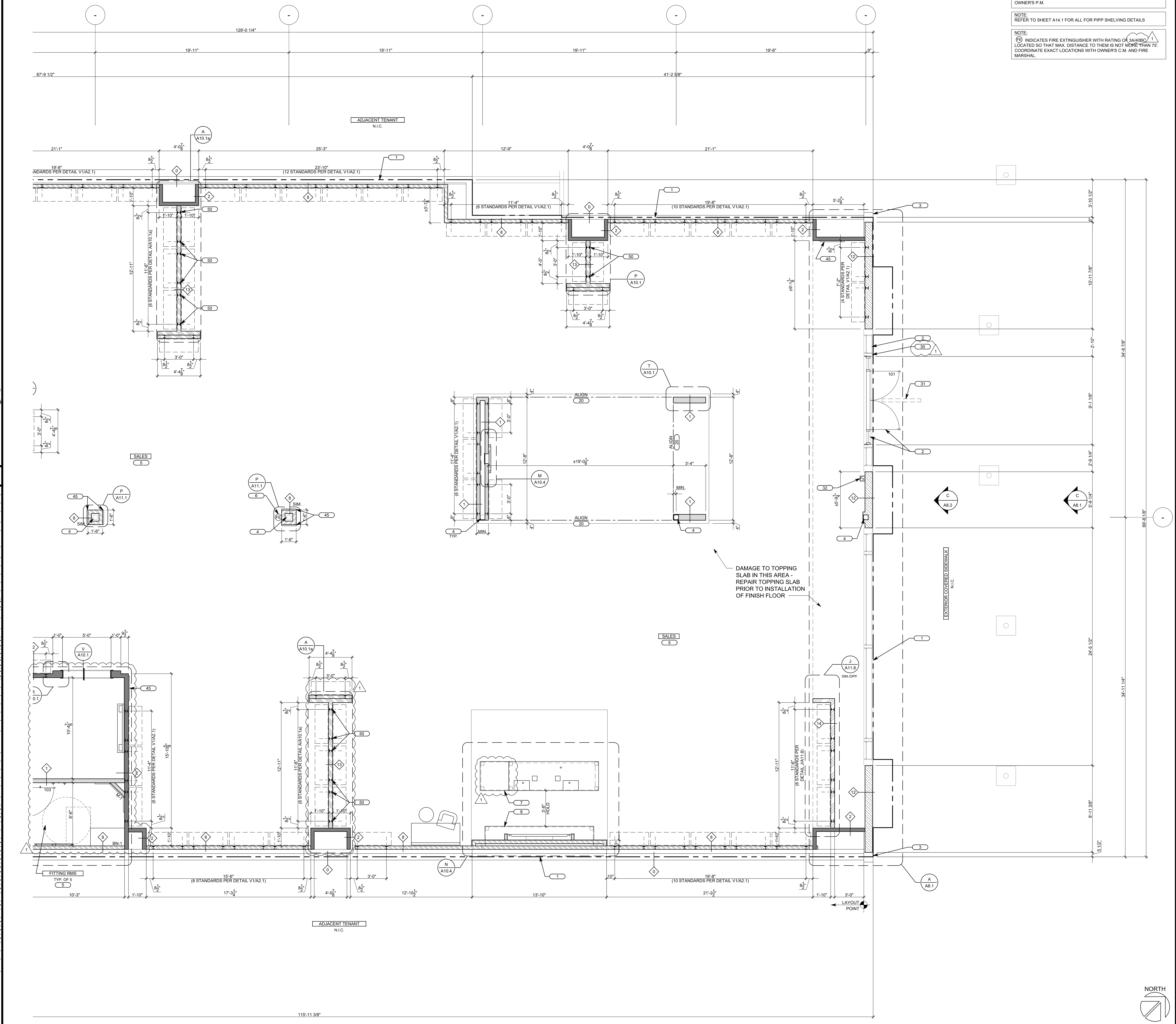

CONSTRUCTION PLAN (A)

1/4" = 1'-0"

OWNER:

5A LANDS' END LANE
DODGEVILLE, WI 53595

ARCHITECT / ENGINEER:

SHREMSHOCK
Shremshock Architects, Inc.
7400 W. Campus Rd. Suite 150 New Albany, OH 43054
t: 614 545 4550 | f: 614 545 4555 | shremshock.com
Gerald S. Shremshock, Architect
Timothy J. Shremshock, Architect

©2019 THE ARCHITECT / ENGINEER ASSUMES NO RESPONSIBILITY OR LIABILITY FOR THE USE OF THESE PLANS FOR ANY PROJECT OTHER THAN SPECIFICALLY AUTHORIZED BY THEM AND SIGNED AND SEALED FOR SUCH SPECIFIC LOCATION IN THE STATE, PROVINCE OR TERRITORY SHOWN ON THE SEAL. THIS BUILDING USE IS ONLY APPLICABLE IN AREAS MEETING THE STATED DESIGN CRITERIA.

STORE NO:
TBD

PROJECT LOCATION:
CONGRESSIONAL PLAZA
1667 ROCKVILLE PIKE
SPACE #06
ROCKVILLE, MD 20852

DESIGN TYPE:
-

REVISIONS:

REQUIRED BY:		DATE
1	CLT CLIENT, LANDLORD & B.D. COMMENTS	07/19/2019

* INDICATES NO REVISION TO THIS SHEET

Professional Certification

I certify that these documents were prepared or approved by me, and that I am a duly licensed architect under the laws of the State of Maryland license number 17246, expiration date February 28, 2021 .

CONSTRUCTION PLAN

DRAWN BY: JAW CHECKED BY: BRW/ELM/RHW

DATE ISSUED: 06/07/2019
PROJECT NO: 190148
DRAWING NO:
A2.1

X INDICATES WALL TYPE

REFER TO R/A11.2 FOR STUD SIZE MATRIX

X / X.XX INDICATES WALL SECTION DETAIL

0 — A/A11.1 — EXISTING TENANT SEPARATION OR CORRIDOR WALL TO REMAIN: G.C. TO PROVIDE FIRE RATING (1-HR) - G.C. TO INSTALL NEW 5/8" TYPE 'X' GYP. BD. - G.C. TO FIRE SAFE ALL VOIDS, FIRE TAPE AND CAULK AS REQUIRED. NOTE: IF TENANT SEPARATION WALLS STOP SHORT OF DECK ABOVE G.C. TO INSTALL 2"X4" WELDED WIRE MESH FROM INSIDE TENANT SEPARATION WALL TO DECK ABOVE. G.C. TO ENSURE WELDED WIRE MESH IS SECURELY ATTACHED

0 — EXISTING PARTITION TO REMAIN. G.C. TO PATCH AND REPAIR AS REQUIRED.

1 — C/A11.1 — SALES AREA PARTITION: G.C. TO PROVIDE 3 5/8" (OR 6") 1 5/8" FLANGE METAL STUDS AT 16" O.C. TO 12'-0" A.F.F. - INSTALL 5/8" GYP. BD. TO 6" ABOVE CEILING ON ONE OR BOTH SIDES - PROVIDE F.R.T. BLOCKING AS REQUIRED.

2 — B/A11.1 — FULL HEIGHT PARTITION: 3 5/8", 1 5/8" FLANGE METAL STUDS AT 16" O.C. TO UNDERSIDE OF DECK ABOVE - INSTALL 5/8" GYP. BD. TO GYP. BD. CEILING, 6" ABOVE LAY-IN CEILING OR TO DECK ABOVE ON ONE OR BOTH SIDES AS NECESSARY - PROVIDE F.R.T. BLOCKING AS REQUIRED

~~3 — C/A11.1 SIM. — TOILET ROOM PARTITION: 3 5/8", 1 5/8" FLANGE METAL STUDS AT 16" O.C. TO UNDERSIDE OF DECK ABOVE - INSTALL GYP BD. TO 12'-0" A.F.F. BOTH SIDES - USE WATER RESISTANT GYP. BD. ON TOILET ROOM SIDE~~

~~4 — A2/A11.4 — TOILET ROOM PARTITION: 3 5/8", 1 5/8" FLANGE METAL STUDS AT 16" O.C. TO UNDERSIDE OF PLATFORM ABOVE - INSTALL 5/8" WATER RESISTANT GYP. BD. ON TOILET ROOM SIDE~~

~~5 — C/A11.1 SIM. — PLUMBING PARTITION: 3 5/8", 1 5/8" FLANGE METAL STUDS AT 16" O.C. - INSTALL WATER RESISTANT GYP. BD. ON EXPOSED TENANT SIDE(S) TO GYP. BD. CEILING, AND ABOVE PLATFORM TO 12'-0" A.F.F. - INSTALL 5/8" WATER RESISTANT GYP. BD. ON TOILET ROOM SIDE~~

6 — C/A11.1 SIM. — NON-SALES PARTITION: 3 5/8", 1 5/8" FLANGE METAL STUDS AT 16" O.C. - INSTALL 5/8" TYPE 'X' GYP. BD. ON BOTH SIDES TO 12'-0" A.F.F.

~~7 — G/A11.1 — PARTIAL HEIGHT PARTITION: 3 5/8", 1 5/8" FLANGE METAL STUDS AT 16" O.C. - G.C. TO INSTALL 5/8" GYP. BD. BOTH SIDES AND TOP OF WALL. TOP OF WALL AT 7'-10" A.F.F.~~

8 — F/A11.1 — FURRING PARTITION: 3 5/8", 1 5/8" FLANGE METAL STUDS AT 16" O.C. G.C. TO INSTALL 5/8" GYP. BD. ON EXPOSED SIDE TO DECK ABOVE OR TO 6" ABOVE CEILING. ANCHOR STUDS TO TENANT SEPARATION WALL AT MIDHEIGHT, TOP & BOTTOM (FOR LATERAL BRACING)

~~9 — E/A11.1 — EXISTING PARTITION TO REMAIN: EXTEND WALL STUDS TO DECK WITH 3 5/8" OR 6", 1 5/8" FLANGE METAL STUDS AT 16" O.C. TO UNDERSIDE OF DECK ABOVE (DOUBLED @ 4'-0" O.C.) TO MATCH SPACING OF EXISTING. LAP NEW STUDS W/EXISTING. INSTALL 5/8" GYP. BD. TO DECK ABOVE ON BOTH SIDES AS NECESSARY. PROVIDE F.R.T. BLOCKING AS REQUIRED.~~

10 — E/A11.1 — 2 HR. RATED WALL: 3 5/8", 1 5/8" FLANGE METAL STUDS AT 16" O.C. TO DECK ABOVE - G.C. TO INSTALL (2) LAYERS 5/8" TYPE 'X' GYP. BD. FULL HEIGHT TO DECK ABOVE TO CREATE 2 HR. FIRE RATED ASSEMBLY - FIRE SAFE, FIRE TAPE AND CAULK AS REQUIRED (UL #U411). REFER TO T/A11.1 FOR PENETRATION DETAIL. (1)

12 — STOREFRONT CONSTRUCTION: REFER TO STOREFRONT SHEETS FOR ADDITIONAL INFORMATION.

13 — PARTIAL HEIGHT SALES PARTITION (T-WALL): REFER TO SHEET A10.1 / A10.1a FOR ADDITIONAL INFORMATION.

14 — PARTIAL HEIGHT SALES PARTITION (AT STOREFRONT): REFER TO SHEET A11.8 FOR ADDITIONAL INFORMATION.

PARTITION LEGEND — V

#	DESCRIPTION
1	LEASE LINE
2	NEW AND EXISTING STOREFRONT SYSTEM - REFER TO A8.1
3	G.C. TO PRESERVE AND PROTECT EXISTING BUILDING CONSTRUCTION, NEUTRAL PIERS AND ADJACENT TENANT CONSTRUCTION, REPAIR AS NEEDED, AND FINISH TO 'LIKE NEW' CONDITIONS PER BUILDING FINISHES
4	EXISTING BUILDING COLUMN TO REMAIN. G.C. TO PROTECT DURING CONSTRUCTION AND MAINTAIN ANY RATING
5	CONCRETE MUST BE LEVEL AND CLEAN OF ANY FOREIGN MATERIALS PRIOR TO INSTALLING NEW FINISHED FLOORING. G.C. TO PERFORM MOISTURE VAPOR EMISSION TEST BEFORE INSTALLING ANY FLOORING - REFER TO SPECIFICATIONS FOR MOISTURE TEST PROCEDURES
6	PORTABLE FIRE EXTINGUISHER. G.C. TO PROVIDE SOLID F.R.T. WOOD BLOCKING. G.C. TO COORDINATE FINAL LOCATION WITH LOCAL FIRE OFFICIAL BEFORE INSTALLATION
7	ACCESSIBLE CASHWRAP - REFER TO SHEET A10.4
8	BACKWRAP - REFER TO SHEET A10.4
9	ELECTRICAL EQUIPMENT AND TELEPHONE BOARD - REFER TO ELECTRICAL DRAWINGS
10	3'-0" CLEAR FLOOR SPACE IN FRONT OF ELECTRICAL EQUIPMENT
11	PLAN TUBE - SEE DETAIL F/A14.1
12	~~TRENCHING FOR NEW ELECTRICAL & DATA CIRCUITS TO CASHWRAP - LOCATION TO BE CONFIRMED & COORDINATED WITH CASHWRAP SHOP DRAWINGS~~
13	(E) PLUMBING FIXTURES
14	(E) FLOOR MOUNTED SERVICE SINK - CLEAN TO 'LIKE NEW' CONDITION AND REPAIR TO PROPER WORKING ORDER - G.C. TO CAULK AT MOP SINK AND ADJACENT SURFACES FOR WATER TIGHT CONDITION
15	(E) HI/LO DRINKING FOUNTAIN
16	~~G.C. TO REMOVE (E) GYP. BD., INSTALL SOUND ATTENUATION INSULATION IN TOILET ROOM PARTITIONS AND REPAIR WALL PER WALL TYPE~~
17	~~PLATFORM ABOVE TOILET ROOM. SEE DETAIL A/A11.4~~
18	~~LIGHT GAUGE HEADER FOR PLATFORM STRUCTURAL SUPPORT. G.C. TO USE (2) 6" 16 GA. STUDS WITH WEB STIFFENERS @ EACH END (600S162-54) AND 3 5/8" 16 GA. (362T162-54) TRACK TOP & BOT~~
19	~~5/8" WATER RESISTANT GYPSUM BOARD FROM TOP OF FINISH FLOOR TO THE CEILING ABOVE. EXTEND TO 12'-0" OR TOP OF PLATFORM BEHIND DRINKING FOUNTAIN WHERE APPLICABLE.~~
20	ALIGN WALLS
21	EMPLOYEE LOCKERS. G.C. TO MECHANICALLY FASTENED TO WALL
22	REFRIGERATOR AND MICROWAVE - REFER TO ELECTRICAL DRAWINGS
23	BREAK AREA - REFER TO D/A14.1
24	MANAGER'S DESK - REFER TO SHEET B/A14.1
25	2"x2"x48" METAL CORNER GUARDS MOUNTED AT TOP OF BASE- NON SALES AREA 16 GA. GALVANIZED, FASTEN WITH SILICONE, CAULK AT EXPOSED EDGES- REFER TO S/A14.1
26	G.C. TO PROVIDE CONTINUOUS 1X6 F.R.T. WOOD FURRING FOR PIPP SHELVING. CENTERLINE OF BLOCKING TO BE MOUNTED AT 7'-10" A.F.F. SECURE FURRING TO WALL STUDS WITH (3) #12 X 2½" LONG STEEL SCREWS @ EACH STUD LOCATION. (IF WALL IS CONCRETE BLOCK, USE HILTI HIT HY20 1/2" DIA. X 6" EMBEDMENT @ 16" O.C.-STAGGERED) SECURE EACH LEG OF SHELVING TO FURRING WITH (2) #12 X 2" LONG STEEL HEX HEAD SCREWS - REFER TO T/A14.1 FOR ANCHORING DETAILS
27	MOBILE SHELVING - REFER TO VENDOR SHOP DRAWINGS & SHEET A14.1
28	ALL EXPOSED SECTIONS OF MOBILE SHELVING TO RECEIVE FULL-HEIGHT PEG BOARD
29	FIXED SHELVING - REFER TO VENDOR SHOP DRAWINGS & M/A14.1
30	DOOR BUZZER - REFER TO ELECTRICAL DRAWINGS - MOUNT AT 48" A.F.F.
31	(N) BLADE SIGN SUPPLIED & INSTALLED ON EXISTING BRACKET BY OWNER'S SIGN VENDOR. REFER TO DETAIL L/A8.4.
32	SECURITY SYSTEM KEYPAD AT 48" A.F.F. - REFER TO ELECTRICAL DRAWINGS
33	~~INSTALL R-19 BATT INSULATION IN WALL~~
34	~~PROVIDE ACCESS PANEL FOR (E) CLEAN OUT. VERIFY LOCATION IN FIELD.~~
35	G.C. TO INSTALL SIGN STATING 'NOT AN EXIT'
36	RECEIVING DESK - REFER TO C/A14.1
37	~~(E) LANDLORD WATER SUPPLY LINE TO REMAIN~~
38	~~CENTERLINE OF ENTRY~~
39	~~STREET ADDRESS TO BE DISPLAYED ON EXTERIOR SIDE OF SERVICE DOOR - COORDINATE WITH LOCAL JURISDICTION~~
40	~~EXISTING RATED WALL TO RECEIVE LETTERING OF 1/2" OR LARGER STATING "FIRE AND/OR SMOKE BARRIER - PROTECT ALL OPENINGS" AT MINIMUM OF EVERY 30'-0" ABOVE CEILING~~
41	~~PROVIDE ACCESS PANEL FOR EXISTING CLEANOUT~~
42	~~(E) EXPANSION JOINT IN SLAB (ASSUMED)~~
43	BOX STAGING AREA
44	~~REMOVE (E) GYP. BD. AND INSTALL GARCY STUDS PER DETAIL V1/A2.1. REFINISH WALL WITH 5/8" TYPE 'X' GYP. BD.~~
45	SALES FLOOR MIRROR - INSTALL PER DETAIL P/A10.2
46	~~ALIGN FACE OF COLUMN WRAP WITH FACE OF SOFFIT ABOVE~~
47	~~INFILL OPENING AND FRAME FOR NEW DOOR~~
48	~~NEW 5/8" TYPE 'X' GYPSUM BOARD OVER EXISTING METAL FRAMING AS REQUIRED.~~
49	CCTV EQUIPMENT - COORDINATE WITH VENDOR SHOP DRAWINGS AND REFER TO ELECTRICAL DRAWINGS
50	GARCY STUD WITH SLOTTED INSERTS ON BOTH SIDES.
51	NETWORK RACK ON 4'-0" X 4'-0" X 3/4" PLYWOOD BACKER BOARD MOUNTED 4'-0" A.F.F. (PAINT TO MATCH ADJACENT WALL) - REFER TO ELECTRICAL DRAWINGS

CONSTRUCTION PLAN CODED NOTES (#) — T

DIMENSION NOTE:
ALL WALL DIMENSIONS ARE TO THE FACE OF FINISH GYP. BD. OR THE FACE OF BLOCKING REQUIRED FOR FIXTURE INSTALLATION. U.N.O.

TENANT SEPARATION WALLS ARE NOT STRUCTURAL:
G.C. TO PROVIDE ALL ADDITIONAL IN-WALL BLOCKING OR SUPPORT AS REQUIRED AND AS DETAILED IN THIS SET.

NOTE:
G.C. TO FIELD VERIFY ALL DIMENSIONS AND SITE CONDITIONS PRIOR TO COMMENCEMENT OF WORK. REPORT ANY DISCREPANCIES TO OWNER'S P.M.

NOTE:
REFER TO SHEET A14.1 FOR ALL FOR PIPP SHELVING DETAILS

NOTE:
(FE) INDICATES FIRE EXTINGUISHER WITH RATING OF 3A/40BC (1) LOCATED SO THAT MAX. DISTANCE TO THEM IS NOT MORE THAN 75'. COORDINATE EXACT LOCATIONS WITH OWNER'S C.M. AND FIRE MARSHAL.

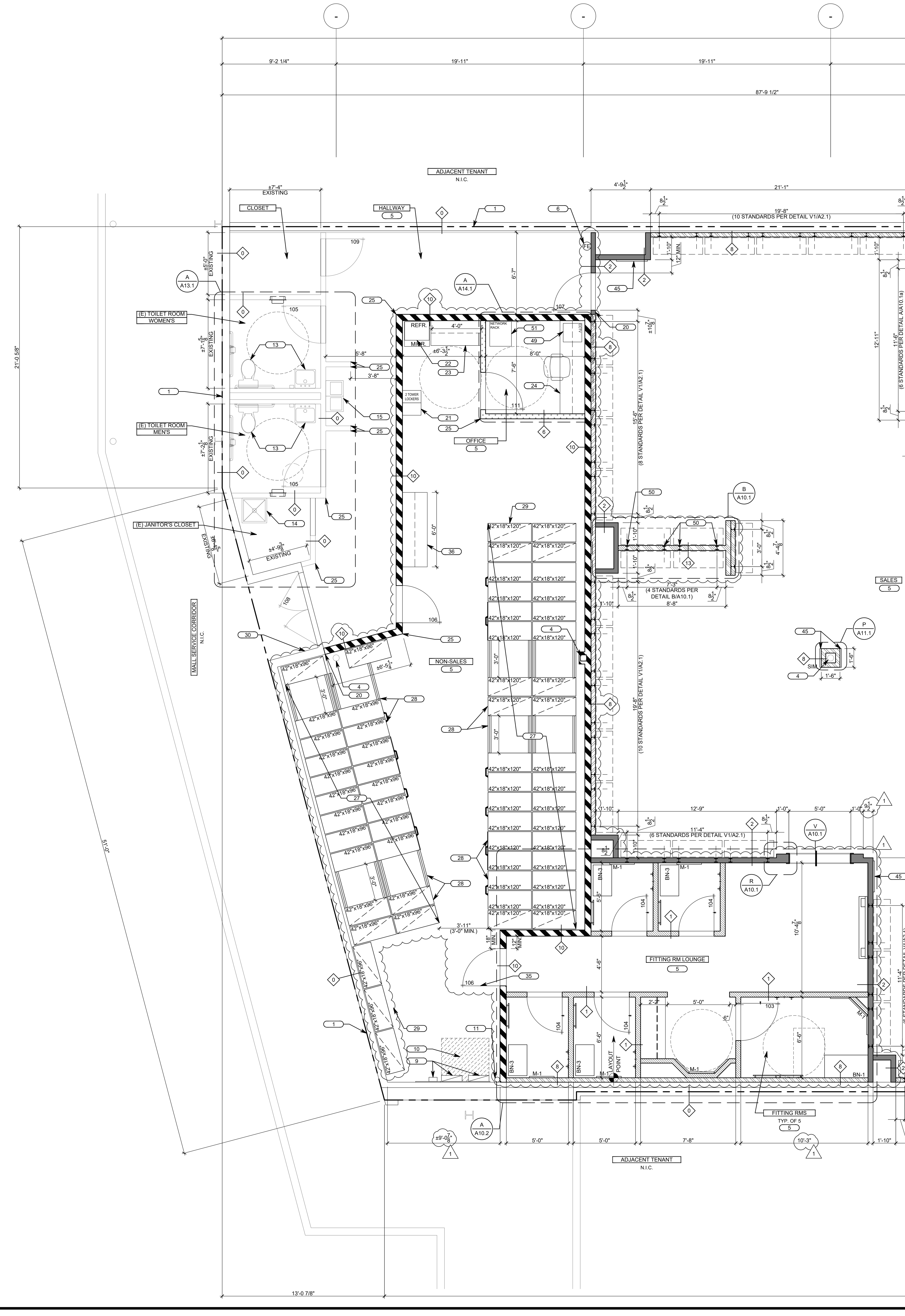

CONSTRUCTION PLAN

1/4" = 1'-0" — A

OWNER:

5A LANDS' END LANE
DODGEVILLE, WI 53595

ARCHITECT / ENGINEER:

SHREMSHOCK
Shremshock Architects, Inc.
7400 W. Campus Rd. Suite 150 New Albany, OH 43054
t: 614 545 4550 | f: 614 545 4555 | shremshock.com
Gerald S. Shremshock, Architect
Timothy J. Shremshock, Architect

©2019 THE ARCHITECT / ENGINEER ASSUMES NO RESPONSIBILITY OR LIABILITY FOR THE USE OF THESE PLANS FOR ANY PROJECT OTHER THAN SPECIFICALLY AUTHORIZED BY THEM AND SIGNED AND SEALED FOR SUCH SPECIFIC LOCATION IN THE STATE, PROVINCE OR TERRITORY SHOWN ON THE SEAL. THIS BUILDING USE IS ONLY APPLICABLE IN AREAS MEETING THE STATED DESIGN CRITERIA.

LANDS' END

STORE NO: TBD

PROJECT LOCATION:
CONGRESSIONAL PLAZA
1667 ROCKVILLE PIKE
SPACE #06
ROCKVILLE, MD 20852

DESIGN TYPE: -

REVISIONS:

REQUIRED BY:		DATE
1	CLT — CLIENT, LANDLORD & B.D. COMMENTS	07/19/2019

* INDICATES NO REVISION TO THIS SHEET

Professional Certification
I certify that these documents were prepared or approved by me, and that I am a duly licensed architect under the laws of the State of Maryland license number 17246, expiration date February 28, 2021 .

CONSTRUCTION PLAN

DRAWN BY: JAW CHECKED BY: BRW/ELM/RHW

DATE ISSUED: 06/07/2019
PROJECT NO: 190148
DRAWING NO: A2.2

SYMBOL	DESCRIPTION
T-1	TRACK HEAD
X'	SURFACE TRACK SYSTEM - MOUNT BOTTOM OF TRACK AT 10'-6" A.F.F.
R-X / R-X EM / R-X EM/NL	LED DOWNLIGHT (EMERGENCY DOWNLIGHT / NIGHTLIGHT)
R-10 / R-10 EM / R-10 EM/NL	~~EXTERIOR LED DOWNLIGHT (EMERGENCY DOWNLIGHT / NIGHTLIGHT)~~
(E)	~~EXISTING DOWNLIGHT - CLEAN TO LIKE NEW CONDITION AND RELAMP~~
P-1	PENDANT LIGHT FIXTURE, COLOR: RED - REFER TO PENDANT FIXTURE HEIGHTS DETAIL FOR CLUSTER AND MOUNT BOTTOM OF FIXTURE AT 8'-0" A.F.F. AT CASHWRAP
P-2	PENDANT LIGHT FIXTURE, COLOR: BLACK - REFER TO PENDANT FIXTURE HEIGHTS DETAIL FOR CLUSTER AND MOUNT BOTTOM OF FIXTURE AT 9'-0" A.F.F. ON SALES FLOOR
P-3	~~EXTERIOR PENDANT LIGHT FIXTURE, COLOR: RED - MOUNT BOTTOM OF FIXTURE AT 8'-0" A.F.F.~~
W-1	~~STOREFRONT WALL SCONCE~~
W-2	~~WALL SCONCE MOUNTED AT 6'-8" MIN. A.F.F. TO BOTTOM OF FIXTURE. C.L. J-BOX @ 7'-4"~~
W-3	WALL SCONCE MOUNTED TO WALL @ 8'-6" A.F.F. TO C.L. OF FIXTURE
W-5	~~EXTERIOR STOREFRONT WALL SCONCE - JBOX CENTERED AT 7'-6" A.F.F.~~
(E)	~~(E) SURFACE MOUNTED EXTERIOR EMERGENCY EGRESS LIGHT W/90 MIN. BATTERY PACK~~
X' XX-X	FLUORESCENT STRIP - CH-X CHAIN HUNG / CH-3 CHAIN HUNG W/ WIRE GUARD / CL-X CEILING MOUNTED / S-X SURFACE MOUNTED
CL-1 EM	1'x4' SURFACE MOUNTED FLUORESCENT WITH PRISMATIC LENS FOR BATHROOM WITH EMERGENCY BATTERY PACK
(E)	(E) 2'x2' LAY IN LIGHT FIXTURE
C EX1	CEILING MOUNTED/SUSPENDED EXIT SIGN WITH BATTERY BACKUP- EDGE LIT (WHITE EXTRUSION)
W EX2 / C EX2	UNIVERSAL WALL MOUNTED, CEILING MOUNTED OR SUSPENDED EXIT SIGN WITH BATTERY BACKUP (J BOX APPLICATION)
W EM2	WALL MOUNTED EMERGENCY LIGHT WITH BATTERY BACKUP - MOUNT AT 11'-0" A.F.F.
EM1	~~RECESSED EMERGENCY LIGHT WITH BATTERY BACKUP~~
S / S W	SOUND SPEAKERS - 'W' DESIGNATES WALL MOUNTED - REFER TO VENDOR DRAWINGS SUSPENDED SPEAKERS PER DETAIL W/A11.1
	WI-FI - LOCATION IS TO BE CENTERED ON AND ALIGNED WITH LIGHTS
ST	TRAFFIC COUNTER - EXACT LOCATION IN CEILING TO BE DETERMINED BY VENDOR
SD	SECURITY DOME - REFER TO VENDOR DRAWINGS
	~~SPIDER TRACK GRAPHIC HANGING SYSTEM AT STOREFRONT~~
	~~ACCESS PANEL - INTEXFORMS - REFER TO MECHANICAL DRAWINGS~~
	RETURN / SUPPLY GRILLE TO ALIGN WITH LIGHTS- REFER TO MECHANICAL DRAWINGS
	EXHAUST GRILLE - REFER TO ENGINEERS DRAWINGS
	~~UNISTRUT SYSTEM~~

LIGHTING FIXTURE SCHEDULE V

1. ENTIRE SALES / NON-SALES FLOOR AREA TO BE FULLY SPRINKLERED IN COMPLIANCE WITH ALL CODE REQUIREMENTS - REFER TO M.E.P. DRAWINGS
2. G.C. MUST MAINTAIN ACCESS TO LANDLORD'S HVAC, ELECTRICAL, AND PLUMBING SYSTEMS, INCLUDING CLEANOUTS, VALVES, DAMPERS, "J" BOXES, SMOKE DETECTORS, ETC. G.C. TO SUPPLY AND INSTALL ACCESS PANELS FLUSH WITH ADJACENT FINISHES AS REQUIRED TO PERMIT SERVICING TO ALL EQUIPMENT LOCATED ABOVE THE CEILING. IF G.C. IS DIRECTED BY THE LANDLORD AND/OR INSPECTOR TO PROVIDE ACCESS PANELS AT LOCATIONS THAT ARE NOT SPECIFIED ON THE PLANS THE G.C. MUST CONTACT CONSTRUCTION MANAGER PRIOR TO THE COMMENCEMENT OF ANY WORK. ANY WORK DONE PRIOR TO CONTACTING THE CONSTRUCTION MANAGER IS THE SOLE RESPONSIBILITY OF THE G.C. AND ALL COST RELATED TO RELOCATING THESE ITEMS A SECOND TIME, AFTER CONSTRUCTION MANAGER DISCUSSES OPTIONS WITH APPROPRIATE PARTIES, WILL BE BACK CHARGED TO THE G.C.
3. ALL CEILING HEIGHTS ARE FROM TOP OF FINISH FLOOR TO UNDERSIDE OF FINISH CEILING - TYP. U.N.O.
4. DO NOT PAINT SPEAKER COVERS, LIGHT COVES, TRIM PIECES, SPRINKLER HEADS OR SPRINKLER HEAD COVERS.
5. ALL LIGHT TRIM IS TO BE STRAIGHT THROUGHOUT THE STORE, RUNNING PARALLEL TO ONE ANOTHER
6. ALL LAMPS IN RECESSED CANS TO BE TURNED THE SAME DIRECTION
7. IF ANY LIGHT FIXTURES ARE EXISTING TO REMAIN, G.C. TO CLEAN & RELAMP ALL FIXTURES TO MATCH NEW FOR CONSISTENCY.

GENERAL NOTES U

#	DESCRIPTION
1	SPIDER TRACK ALIGNED WITH STOREFRONT TRACK LIGHT AS SHOWN - REFER TO G/A8.3
2	CEILING RECEPTACLE 6" FROM WALL AND 12" FROM TRACK LIGHT (OR AS NOTED) - REFER TO ELECTRICAL DRAWINGS
3	CENTER LIGHT TRACK ON STOREFRONT AND SET 4" FROM STOREFRONT SYSTEM (U.N.O.)
4	~~LINE OF MALL BULKHEAD ABOVE~~
5	LINE OF (E) OVERHANG ABOVE
6	CENTERLINE OF ENTRY DOORS, CAN LIGHTS AND SHOPPER TRACK
7	~~24"X24" ACCESS PANEL FOR STOREFRONT SIGN. G.C. TO ENSURE J-BOX AND DISCONNECT FOR SIGN ARE ACCESSIBLE FROM THIS LOCATION. IF NOT, NOTIFY OWNER'S PM FOR DIRECTION.~~
8	~~TOILET ROOM LIGHT FIXTURE~~
9	~~PLATFORM LIGHT FIXTURE~~
10	B.O. LIGHT FIXTURES TO BE MOUNTED AT 13'-0" A.F.F.
11	~~START TILE~~
12	LOCATE CENTER OF EXIT LIGHT ON CENTERLINE OF DOORWAY/OPENING (6" FROM WALL OR SOFFIT WHEN CEILING MOUNTED OR AS NOTED)
13	CENTERLINE OF CASHWRAP, BACKWRAP AND LIGHT FIXTURES
14	SUSPENDED TRACK LIGHTS MOUNTED AT 10'-6" A.F.F., REFER TO S/A11.1
15	BLADE SIGN - FINAL LOCATION PER APPROVED SHOP DRAWINGS. REFER TO VENDOR SHOP DRAWINGS
16	B.O. P-1 LIGHT FIXTURES TO BE MOUNTED AT 8'-0" A.F.F. (1)
17	EXPOSED DUCT WORK - REFER TO MECHANICAL DRAWINGS
18	PREFINISHED DECORATIVE ARCH FIXTURE - REFER TO INTERIOR ELEVATIONS
19	AIR CURTAIN ABOVE - REFER TO STOREFRONT SECTIONS AND MECHANICAL DRAWINGS
20	~~(E) OR (R) ACCESS PANEL IN EXISTING BUILDING SOFFIT. COORDINATE RELOCATION WITH LANDLORD AS REQUIRED.~~
21	REFER TO PENDANT FIXTURE HEIGHTS DETAIL A-1/A3.1 FOR PENDANT CLUSTER
22	~~ALIGN FACE OF SOFFIT WITH FACE OF (E) COLUMN WRAP~~
23	~~MODIFY (E) 24X48 GRID TO BE 24X24 FOR NEW TILE PER CLG 6. PAINT EXISTING GRID P-1C.~~
24	~~INFILL AREA WITH NEW CEILING GRID PER CLG 2 TO MATCH HEIGHT OF ADJACENT (E) CEILING. (SHOWN HATCHED)~~
25	~~(E) 24X24 WITH NEW TILE PER CLG 6. PAINT EXISTING GRID P-1C.~~

CODED NOTES (#) T

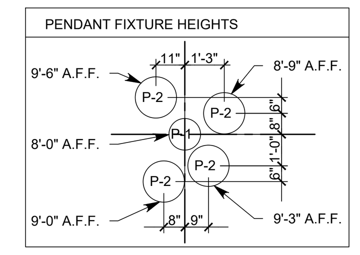

PENDANT FIXTURE HEIGHTS (1)

CEILING LEGEND				
CODE	HATCH	MATERIAL	MANUFACTURER	DESCRIPTION
CLG-1		GYPSUM BOARD	USG OR APPROVED EQUAL	SALES FLOOR, LOUNGE AREA, FITTING ROOMS AND HALLWAY/CORRIDOR AS REQUIRED BY CODE
CLG-4		ACOUSTICAL TILE	MATCH EXISTING (2X2 OR 2X4)	G.C. TO MODIFY GRID WITH NEW CONSTRUCTION AND REPAIR/REPLACE EXISTING TILES AS REQUIRED TO ACHIEVE 'LIKE-NEW' CONDITION

REFER TO ELECTRICAL DRAWINGS FOR ADDITIONAL INFORMATION

(E) LIGHTS TO REMAIN SHOULD BE RE-LAMPED TO MATCH NEW LIGHTS

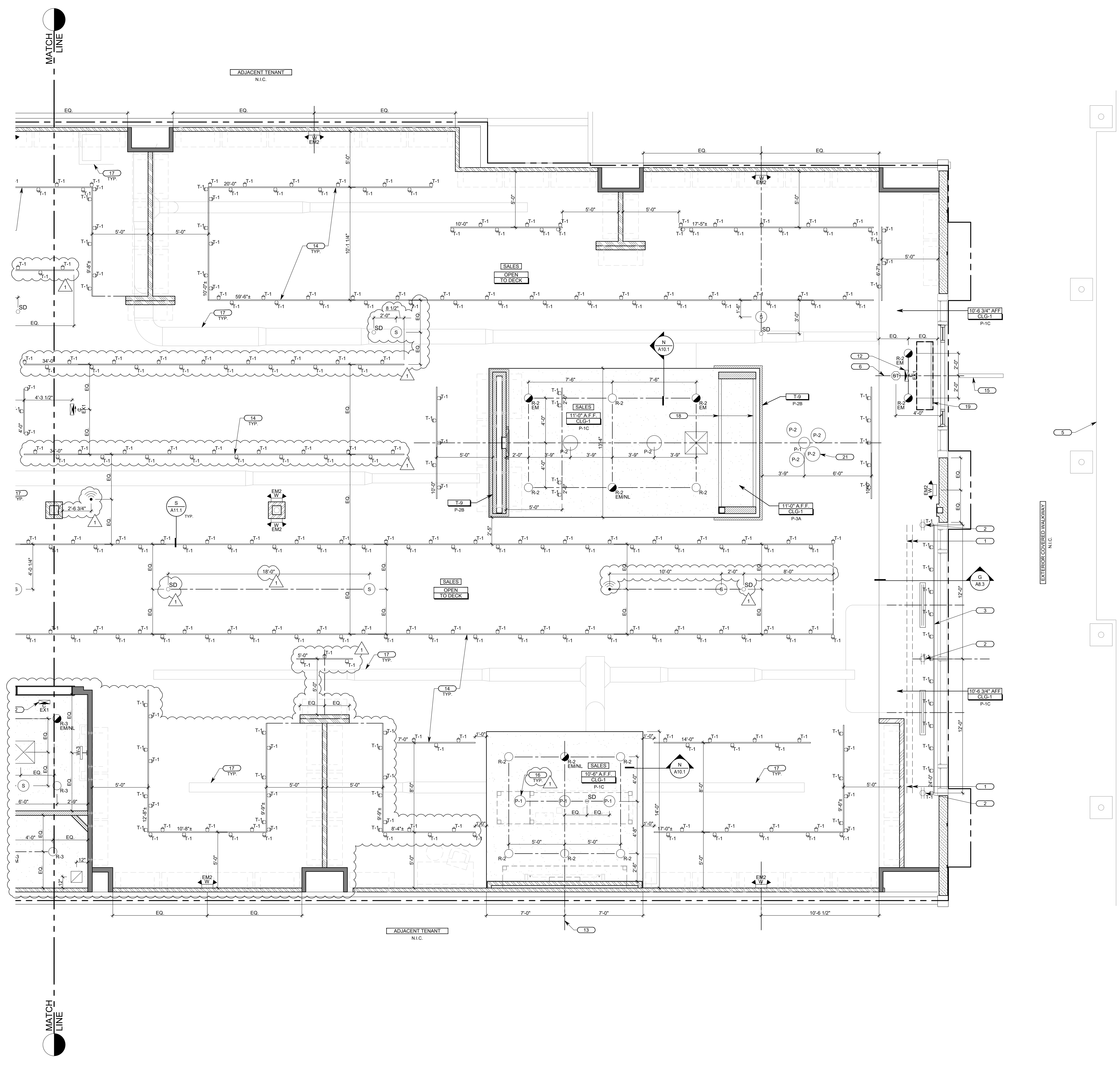

REFLECTED CEILING / LIGHTING PLAN A

1/4" = 1'-0"

OWNER:

5A LANDS' END LANE
DODGEVILLE, WI 53595

ARCHITECT / ENGINEER:

SHREMSHOCK
Shremshock Architects, Inc.
7400 W. Campus Rd. Suite 150 New Albany, OH 43054
t: 614 545 4550 | f: 614 545 4555 | shremshock.com
Gerald S. Shremshock, Architect
Timothy J. Shremshock, Architect

©2019 THE ARCHITECT / ENGINEER ASSUMES NO RESPONSIBILITY OR LIABILITY FOR THE USE OF THESE PLANS FOR ANY PROJECT OTHER THAN SPECIFICALLY AUTHORIZED BY THEM AND SIGNED AND SEALED FOR SUCH SPECIFIC LOCATION IN THE STATE, PROVINCE OR TERRITORY SHOWN ON THE SEAL. THIS BUILDING USE IS ONLY APPLICABLE IN AREAS MEETING THE STATED DESIGN CRITERIA.

STORE NO: TBD

PROJECT LOCATION:
CONGRESSIONAL PLAZA
1667 ROCKVILLE PIKE
SPACE #06
ROCKVILLE, MD 20852

DESIGN TYPE: -

REVISIONS:

REQUIRED BY:		DATE
1 CLT	CLIENT, LANDLORD & B.D. COMMENTS	07/19/2019

* INDICATES NO REVISION TO THIS SHEET

Professional Certification

I certify that these documents were prepared or approved by me, and that I am a duly licensed architect under the laws of the State of Maryland license number 17246, expiration date February 28, 2021.

REFLECTED CEILING / LIGHTING PLAN

DRAWN BY: JAW CHECKED BY: BRW/ELM/RHW

DATE ISSUED: 06/07/2019
PROJECT NO: 190148
DRAWING NO: A3.1

SYMBOL	DESCRIPTION
T-1	TRACK HEAD
X'	SURFACE TRACK SYSTEM - MOUNT BOTTOM OF TRACK AT 10'-6" A.F.F.
R-X / R-X EM / R-X EM/NL	LED DOWNLIGHT (EMERGENCY DOWNLIGHT / NIGHTLIGHT)
~~R-10 / R-10 EM / R-10 EM/NL~~	~~EXTERIOR LED DOWNLIGHT (EMERGENCY DOWNLIGHT / NIGHTLIGHT)~~
~~(E)~~	~~EXISTING DOWNLIGHT - CLEAN TO LIKE NEW CONDITION AND RELAMP~~
P-1	PENDANT LIGHT FIXTURE, COLOR: RED - REFER TO PENDANT FIXTURE HEIGHTS DETAIL FOR CLUSTER AND MOUNT BOTTOM OF FIXTURE AT 8'-0" A.F.F. AT CASHWRAP
P-2	PENDANT LIGHT FIXTURE, COLOR: BLACK - REFER TO PENDANT FIXTURE HEIGHTS DETAIL FOR CLUSTER AND MOUNT BOTTOM OF FIXTURE AT 9'-0" A.F.F. ON SALES FLOOR
~~P-3~~	~~EXTERIOR PENDANT LIGHT FIXTURE, COLOR: RED - MOUNT BOTTOM OF FIXTURE AT 8'-0" A.F.F.~~
~~W-1~~	~~STOREFRONT WALL SCONCE~~
~~W-2~~	~~WALL SCONCE MOUNTED AT 6'-8" MIN. A.F.F. TO BOTTOM OF FIXTURE. C.L. J-BOX @ 7'-4"~~
W-3	WALL SCONCE MOUNTED TO WALL @ 8'-6" A.F.F. TO C.L. OF FIXTURE
~~W-5~~	~~EXTERIOR STOREFRONT WALL SCONCE - JBOX CENTERED AT 7'-6" A.F.F.~~
~~(E)~~	~~(E) SURFACE MOUNTED EXTERIOR EMERGENCY EGRESS LIGHT W/90 MIN. BATTERY PACK~~
X' XX-X	FLUORESCENT STRIP - CH-X CHAIN HUNG / CH-3 CHAIN HUNG W/ WIRE GUARD / CL-X CEILING MOUNTED / S-X SURFACE MOUNTED
CL-1 EM	1'x4' SURFACE MOUNTED FLUORESCENT WITH PRISMATIC LENS FOR BATHROOM WITH EMERGENCY BATTERY PACK
(E)	(E) 2'x2' LAY IN LIGHT FIXTURE
C EX1	CEILING MOUNTED/SUSPENDED EXIT SIGN WITH BATTERY BACKUP- EDGE LIT (WHITE EXTRUSION)
W EX2 / C EX2	UNIVERSAL WALL MOUNTED, CEILING MOUNTED OR SUSPENDED EXIT SIGN WITH BATTERY BACKUP (J BOX APPLICATION)
W EM2	WALL MOUNTED EMERGENCY LIGHT WITH BATTERY BACKUP - MOUNT AT 11'-0" A.F.F.
~~EM1~~	~~RECESSED EMERGENCY LIGHT WITH BATTERY BACKUP~~
S / S W	SOUND SPEAKERS - 'W' DESIGNATES WALL MOUNTED - REFER TO VENDOR DRAWINGS SUSPENDED SPEAKERS PER DETAIL W/A11.1
	WI-FI - LOCATION IS TO BE CENTERED ON AND ALIGNED WITH LIGHTS
ST	TRAFFIC COUNTER - EXACT LOCATION IN CEILING TO BE DETERMINED BY VENDOR
SD	SECURITY DOME - REFER TO VENDOR DRAWINGS
	~~SPIDER TRACK GRAPHIC HANGING SYSTEM AT STOREFRONT~~
	~~ACCESS PANEL - INTEXFORMS - REFER TO MECHANICAL DRAWINGS~~
	RETURN / SUPPLY GRILLE TO ALIGN WITH LIGHTS- REFER TO MECHANICAL DRAWINGS
	EXHAUST GRILLE - REFER TO ENGINEERS DRAWINGS
	~~UNISTRUT SYSTEM~~

LIGHTING FIXTURE SCHEDULE V

NOT USED U

#	DESCRIPTION
1	SPIDER TRACK ALIGNED WITH STOREFRONT TRACK LIGHT AS SHOWN - REFER TO G/A8.3
2	CEILING RECEPTACLE 6" FROM WALL AND 12" FROM TRACK LIGHT (OR AS NOTED) - REFER TO ELECTRICAL DRAWINGS
3	CENTER LIGHT TRACK ON STOREFRONT AND SET 4" FROM STOREFRONT SYSTEM (U.N.O.)
~~4~~	~~LINE OF MALL BULKHEAD ABOVE~~
5	LINE OF (E) OVERHANG ABOVE
6	CENTERLINE OF ENTRY DOORS, CAN LIGHTS AND SHOPPER TRACK
~~7~~	~~24"X24" ACCESS PANEL FOR STOREFRONT SIGN. G.C. TO ENSURE J-BOX AND DISCONNECT FOR SIGN ARE ACCESSIBLE FROM THIS LOCATION. IF NOT, NOTIFY OWNER'S PM FOR DIRECTION.~~
~~8~~	~~TOILET ROOM LIGHT FIXTURE~~
~~9~~	~~PLATFORM LIGHT FIXTURE~~
10	B.O. LIGHT FIXTURES TO BE MOUNTED AT 13'-0" A.F.F.
~~11~~	~~START TILE~~
12	LOCATE CENTER OF EXIT LIGHT ON CENTERLINE OF DOORWAY/OPENING (6" FROM WALL OR SOFFIT WHEN CEILING MOUNTED OR AS NOTED)
13	CENTERLINE OF CASHWRAP, BACKWRAP AND LIGHT FIXTURES
14	SUSPENDED TRACK LIGHTS MOUNTED AT 10'-6" A.F.F., REFER TO S/A11.1
15	BLADE SIGN - FINAL LOCATION PER APPROVED SHOP DRAWINGS. REFER TO VENDOR SHOP DRAWINGS
16	B.O. P-1 LIGHT FIXTURES TO BE MOUNTED AT 8'-0" A.F.F. (1)
17	EXPOSED DUCT WORK - REFER TO MECHANICAL DRAWINGS
18	PREFINISHED DECORATIVE ARCH FIXTURE - REFER TO INTERIOR ELEVATIONS
19	AIR CURTAIN ABOVE - REFER TO STOREFRONT SECTIONS AND MECHANICAL DRAWINGS
~~20~~	~~(E) OR (R) ACCESS PANEL IN EXISTING BUILDING SOFFIT. COORDINATE RELOCATION WITH LANDLORD AS REQUIRED.~~
21	REFER TO PENDANT FIXTURE HEIGHTS DETAIL A-1/A3.1 FOR PENDANT CLUSTER
~~22~~	~~ALIGN FACE OF SOFFIT WITH FACE OF (E) COLUMN WRAP~~
~~23~~	~~MODIFY (E) 24X48 GRID TO BE 24X24 FOR NEW TILE PER CLG-6. PAINT EXISTING GRID P-1C.~~
~~24~~	~~INFILL AREA WITH NEW CEILING GRID PER CLG-2 TO MATCH HEIGHT OF ADJACENT (E) CEILING. (SHOWN HATCHED)~~
~~25~~	~~(E) 24X24 WITH NEW TILE PER CLG-6. PAINT EXISTING GRID P-1C.~~

CODED NOTES (#) T

REFER TO ELECTRICAL DRAWINGS FOR ADDITIONAL INFORMATION

LIGHT FIXTURE PLACEMENT TO BE CENTERED IN A.C.T. TILE U.N.O.

(E) LIGHTS TO REMAIN SHOULD BE RE-LAMPED TO MATCH NEW LIGHTS

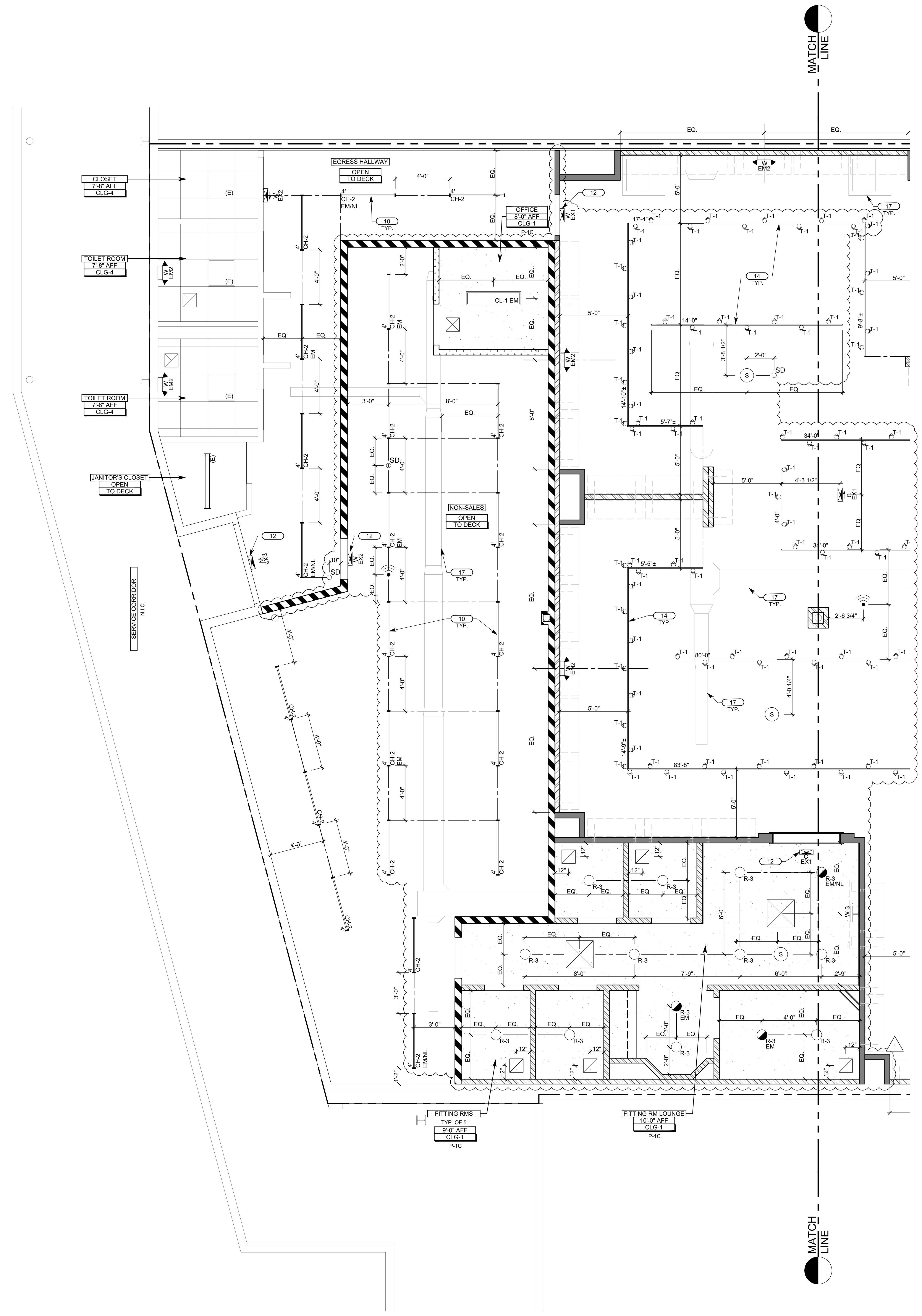

NORTH

REFLECTED CEILING / LIGHTING PLAN A

1/4" = 1'-0"

OWNER:

5A LANDS' END LANE
DODGEVILLE, WI 53595

ARCHITECT / ENGINEER:

SHREMSHOCK
Shremshock Architects, Inc.
7400 W. Campus Rd. Suite 150 New Albany, OH 43054
t: 614 545 4550 | f: 614 545 4555 | shremshock.com
Gerald S. Shremshock, Architect
Timothy J. Shremshock, Architect

©2019 THE ARCHITECT / ENGINEER ASSUMES NO RESPONSIBILITY OR LIABILITY FOR THE USE OF THESE PLANS FOR ANY PROJECT OTHER THAN SPECIFICALLY AUTHORIZED BY THEM AND SIGNED AND SEALED FOR SUCH SPECIFIC LOCATION IN THE STATE, PROVINCE OR TERRITORY SHOWN ON THE SEAL. THIS BUILDING USE IS ONLY APPLICABLE IN AREAS MEETING THE STATED DESIGN CRITERIA.

LANDS' END

STORE NO: TBD

PROJECT LOCATION:
CONGRESSIONAL PLAZA
1667 ROCKVILLE PIKE
SPACE #06
ROCKVILLE, MD 20852

DESIGN TYPE: -

REVISIONS:

REQUIRED BY:		DATE
1	CLT CLIENT, LANDLORD & B.O. COMMENTS	07/19/2019

* INDICATES NO REVISION TO THIS SHEET

Professional Certification

I certify that these documents were prepared or approved by me, and that I am a duly licensed architect under the laws of the State of Maryland license number 17246, expiration date February 28, 2021.

REFLECTED CEILING / LIGHTING PLAN

DRAWN BY: JAW CHECKED BY: BRW/ELM/RHW

DATE ISSUED: 06/07/2019

PROJECT NO: 190148

DRAWING NO: A3.2

1. NO SUBSTITUTIONS WILL BE PERMITTED WITHOUT PRIOR WRITTEN CONSENT FROM OWNER.
2. G.C. TO PROVIDE MOISTURE VAPOR EMISSION TEST RESULTS ON THE SLAB AFTER THE SPACE HAS BEEN ACCLIMATED TO TEMPERATURE FOR A MINIMUM OF ONE WEEK. TEST AT 6 LOCATIONS ON THE SLAB USING CALCIUM CHLORIDE METHOD. EXACT TESTING LOCATIONS SHOULD BE NOTED ON THIS SHEET WITH THE CORRESPONDING RESULTS AND SENT TO LANDS' END PROJECT MANAGER FOR REVIEW. PENDING THE RESULTS THE G.C. MAY HAVE TO SEAL CONCRETE AS DIRECTED.
3. ALL FIXTURES IN SALES AREA ARE PROVIDED BY OWNER AND INSTALLED BY G.C. - COORDINATE FINAL FLOOR FIXTURE LAYOUT WITH P.M.
4. REFER TO SHEET G1.3 FOR FINISH SCHEDULE.
5. G.C. TO ENSURE THAT NO GROUT RESIDUE IS LEFT ON TILE.
6. G.C. TO ROLL WALL COVERING AT TOP OF LOW WALLS AND OVERLAP WALL COVERING FROM OPPOSITE SIDE THEN STAPLE & CAULK.
7. G.C. TO ROLL ALL WALL COVERING AT INSIDE CORNER FOR CONTINUOUS RUNS.

FINISH PLAN GENERAL NOTES W

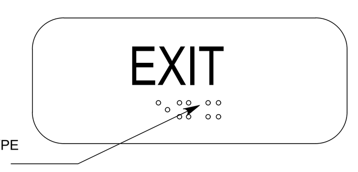

NOTE: TACTILE CHARACTERS ON SIGNS SHALL BE LOCATED 48 INCHES MINIMUM ABOVE THE FINISH FLOOR OR GROUND SURFACE, MEASURED FROM THE BASELINE OF THE LOWEST TACTILE CHARACTER AND 60 INCHES MAXIMUM ABOVE FINISH FLOOR OR GROUND SURFACE, MEASURED FROM THE BASELINE OF THE HIGHEST TACTILE CHARACTER - REFER TO G/A13.1

TACTILE EXIT SIGNAGE V

NOT USED U

#	DESCRIPTION
~~1~~	~~HATCH AREA INDICATES AREA FOR G.C. TO INSTALL MALL FLOORING TO LEASE LINE~~
2	PRE-FINISHED CASHWRAP, BASE SUPPLIED AND INSTALLED BY G.C. - REFER TO DETAILS ON SHEET A10.4
3	PRE-FINISHED BACKWRAP, BASE SUPPLIED AND INSTALLED BY G.C. - REFER TO DETAILS ON SHEET A10.4
4	G.C. TO CONTINUE FLOORING BENEATH CASHWRAP AND BACKWRAP
~~5~~	~~ANTI-FATIGUE MAT INSTALLED OVER FINISH FLOOR~~
6	DASHED LINE INDICATES WAINSCOTING (FRP-1) TO 48" A.F.F. (1)
~~7~~	~~G.C. TO PROVIDE AND INSTALL WATERPROOF MEMBRANE (LATICRETE 9235 OR APPROVED EQUAL PER LANDLORD REQUIREMENTS) UNDER FLOOR AND 6" UP WALLS~~
~~8~~	~~ACCESSIBLE THRESHOLD~~
~~9~~	~~G.C. TO FINISH EXIT ALCOVE AREA TO MATCH (E) MALL FINISHES - COORDINATE WITH LANDLORD~~
10	RANDOM STAGGER PATTER - REFER TO M/A12.1
11	FITTING ROOM BENCH (REFER TO SHEET A10.2)
12	FITTING ROOM MIRROR (M-1, REFER TO SHEET A10.2)
13	FITTING ROOM HANG BAR AND HOOKS (REFER TO SHEET A10.2)
14	LOUNGE MIRROR (M-1, REFER TO SHEET A10.2)
15	HATCH AREA INDICATES WHERE G.C. TO FLASH SKIM CONCRETE SLAB TO A MAX. TOLERANCE TO 1/8" IN 12'-0" OF STORAGE SHELF TRACK (ENTIRE AREA)
16	ALIGN FLOOR TRANSITION WITH THIS SIDE OF DOOR JAMB
~~17~~	~~START TILE~~
18	G.C. TO INSTALL TACTILE EXIT SIGNS THAT READ 'EXIT' TO COMPLY WITH IBC SECTION 1011. REFER TO V/A5.1
~~19~~	~~(E) FLOOR DRAIN/CLEAN OUT IN FLOOR TO REMAIN FUNCTIONAL~~
~~20~~	~~PATCH AND REPAIR WALLS TO MATCH EXISTING WITH RELOCATED ACCESSORIES AND FIXTURES~~
21	ALIGN FLOORING TRANSITION WITH FACE OF WALL BASE (TYP.), REFER TO G/A12.1
22	WALL BASE - REFER TO H/A12.1

FINISH PLAN CODED NOTES (#) T

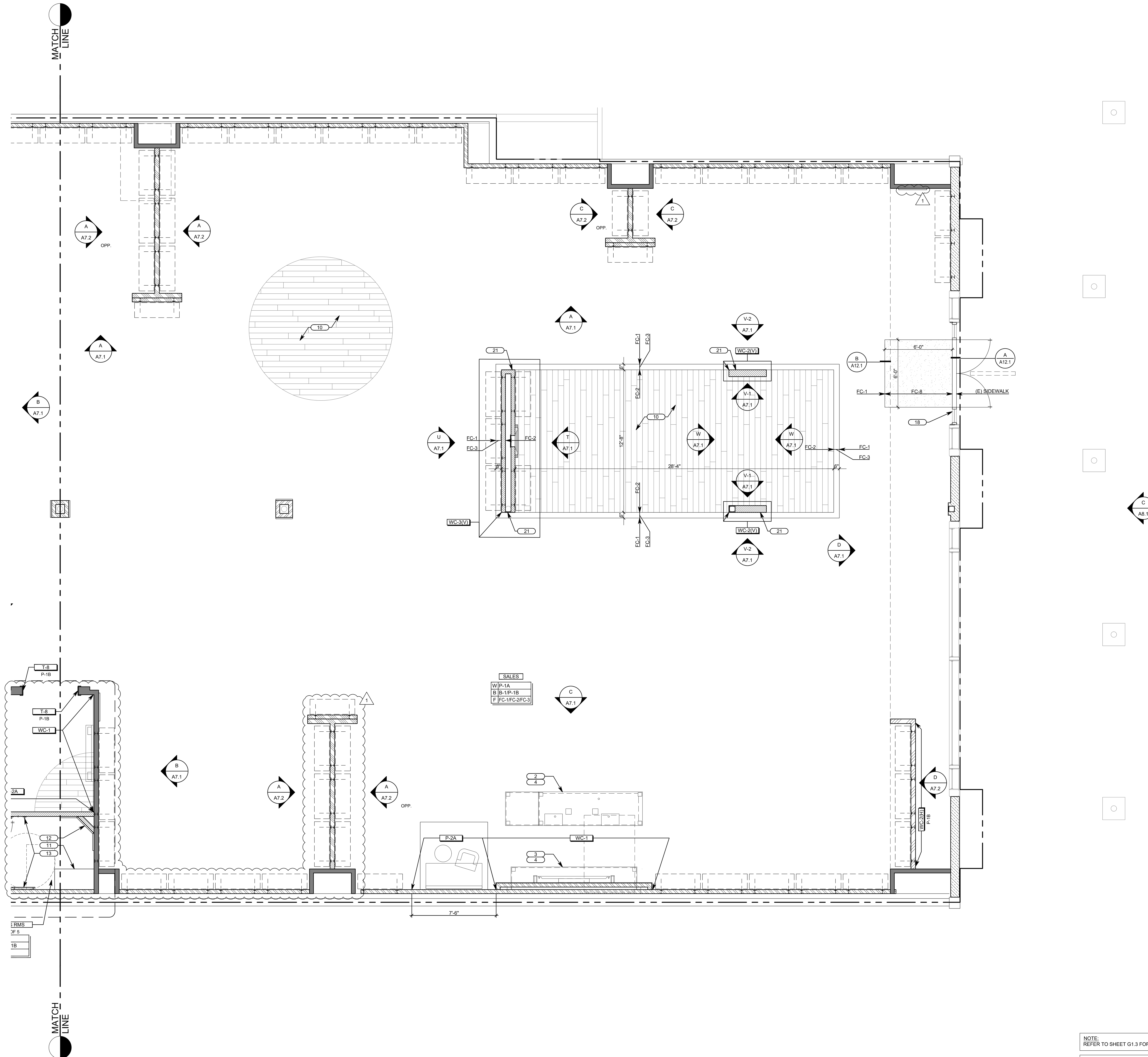

NOTE:
REFER TO SHEET G1.3 FOR FINISH SCHEDULE.

NOTE:
G.C. TO FLOAT FLOORING A MINIMUM OF 6'-0" OUT FROM TRANSITION STRIP TO ALIGN FLOORING MATERIALS. REFER TO A12.1 FOR TRANSITION DETAILS.

NORTH

FINISH PLAN A

1/4" = 1'-0"

-

OWNER:

5A LANDS' END LANE
DODGEVILLE, WI 53595

ARCHITECT / ENGINEER:

SHREMSHOCK
Shremshock Architects, Inc.
7400 W. Campus Rd. Suite 150 New Albany, OH 43054
t: 614 545 4550 | f: 614 545 4555 | shremshock.com
Gerald S. Shremshock, Architect
Timothy J. Shremshock, Architect

©2019 THE ARCHITECT / ENGINEER ASSUMES NO RESPONSIBILITY OR LIABILITY FOR THE USE OF THESE PLANS FOR ANY PROJECT OTHER THAN SPECIFICALLY AUTHORIZED BY THEM AND SIGNED AND SEALED FOR SUCH SPECIFIC LOCATION IN THE STATE, PROVINCE OR TERRITORY SHOWN ON THE SEAL. THIS BUILDING USE IS ONLY APPLICABLE IN AREAS MEETING THE STATED DESIGN CRITERIA.

LANDS' END

STORE NO:
TBD

PROJECT LOCATION:
CONGRESSIONAL PLAZA
1667 ROCKVILLE PIKE
SPACE #06
ROCKVILLE, MD 20852

DESIGN TYPE:
-

REVISIONS:

REQUIRED BY:		DATE
1 CLT	CLIENT, LANDLORD & B.D. COMMENTS	07/19/2019

* INDICATES NO REVISION TO THIS SHEET

Professional Certification

I certify that these documents were prepared or approved by me, and that I am a duly licensed architect under the laws of the State of Maryland license number 17246, expiration date February 28, 2021.

FINISH PLAN

DRAWN BY: JAW CHECKED BY: BRW/ELM/RHW

DATE ISSUED: 06/07/2019
PROJECT NO: 190148
DRAWING NO:
A5.1

NOT USED

U

#	DESCRIPTION
~~1~~	~~HATCH AREA INDICATES AREA FOR G.C. TO INSTALL MALL FLOORING TO LEASE LINE~~
2	PRE-FINISHED CASHWRAP, BASE SUPPLIED AND INSTALLED BY G.C. - REFER TO DETAILS ON SHEET A10.4
3	PRE-FINISHED BACKWRAP, BASE SUPPLIED AND INSTALLED BY G.C. - REFER TO DETAILS ON SHEET A10.4
4	G.C. TO CONTINUE FLOORING BENEATH CASHWRAP AND BACKWRAP
~~5~~	~~ANTI-FATIGUE MAT INSTALLED OVER FINISH FLOOR~~
6	DASHED LINE INDICATES WAINSCOTING (FRP-1) TO 48" A.F.F. (1)
~~7~~	~~G.C. TO PROVIDE AND INSTALL WATERPROOF MEMBRANE (LATICRETE 9235 OR APPROVED EQUAL PER LANDLORD REQUIREMENTS) UNDER FLOOR AND 6" UP WALLS~~
~~8~~	~~ACCESSIBLE THRESHOLD~~
~~9~~	~~G.C. TO FINISH EXIT ALCOVE AREA TO MATCH (E) MALL FINISHES - COORDINATE WITH LANDLORD~~
10	RANDOM STAGGER PATTER - REFER TO M/A12.1
11	FITTING ROOM BENCH (REFER TO SHEET A10.2)
12	FITTING ROOM MIRROR (M-1, REFER TO SHEET A10.2)
13	FITTING ROOM HANG BAR AND HOOKS (REFER TO SHEET A10.2)
14	LOUNGE MIRROR (M-1, REFER TO SHEET A10.2)
15	HATCH AREA INDICATES WHERE G.C. TO FLASH SKIM CONCRETE SLAB TO A MAX. TOLERANCE TO 1/8" IN 12'-0" OF STORAGE SHELF TRACK (ENTIRE AREA)
16	ALIGN FLOOR TRANSITION WITH THIS SIDE OF DOOR JAMB
~~17~~	~~START TILE~~
18	G.C. TO INSTALL TACTILE EXIT SIGNS THAT READ 'EXIT' TO COMPLY WITH IBC SECTION 1011. REFER TO V/A5.1
~~19~~	~~(E) FLOOR DRAIN/CLEAN OUT IN FLOOR TO REMAIN FUNCTIONAL~~
~~20~~	~~PATCH AND REPAIR WALLS TO MATCH EXISTING WITH RELOCATED ACCESSORIES AND FIXTURES~~
21	ALIGN FLOORING TRANSITION WITH FACE OF WALL BASE (TYP.), REFER TO G/A12.1
22	WALL BASE - REFER TO H/A12.1

FINISH PLAN CODED NOTES (#)

T

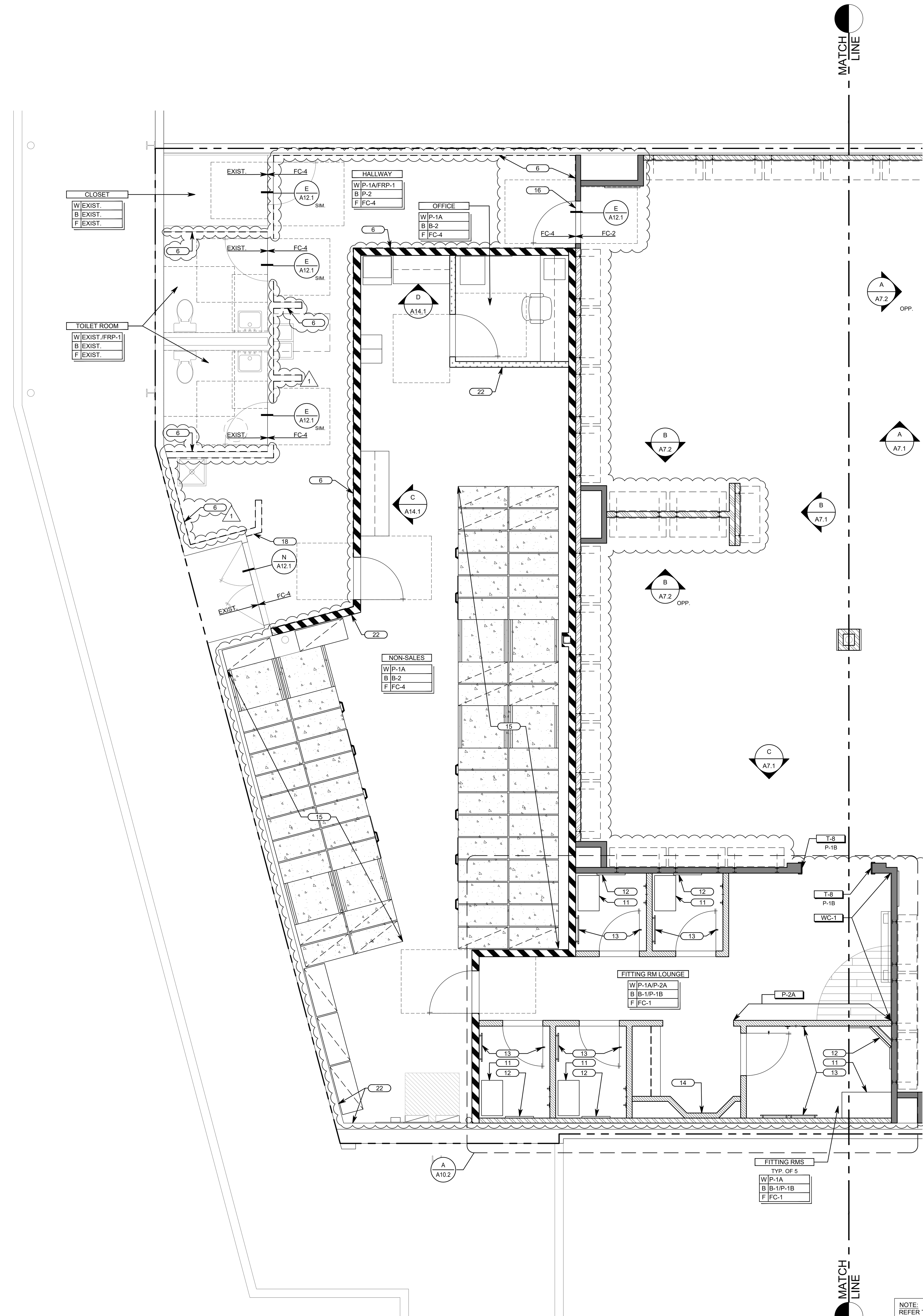

NOTE:
REFER TO SHEET G1.3 FOR FINISH SCHEDULE.

NOTE:
G.C. TO FLOAT FLOORING A MINIMUM OF 6'-0" OUT FROM TRANSITION STRIP TO ALIGN FLOORING MATERIALS. REFER TO A12.1 FOR TRANSITION DETAILS.

NORTH

FINISH PLAN

1/4" = 1'-0"

-

A

OWNER:

5A LANDS' END LANE
DODGEVILLE, WI 53595

ARCHITECT / ENGINEER:

SHREMSHOCK
Shremshock Architects, Inc.
7400 W. Campus Rd. Suite 150 New Albany, OH 43054
t: 614 545 4550 | f: 614 545 4555 | shremshock.com
Gerald S. Shremshock, Architect
Timothy J. Shremshock, Architect

©2019 THE ARCHITECT / ENGINEER ASSUMES NO RESPONSIBILITY OR LIABILITY FOR THE USE OF THESE PLANS FOR ANY PROJECT OTHER THAN SPECIFICALLY AUTHORIZED BY THEM AND SIGNED AND SEALED FOR SUCH SPECIFIC LOCATION IN THE STATE, PROVINCE OR TERRITORY SHOWN ON THE SEAL. THIS BUILDING USE IS ONLY APPLICABLE IN AREAS MEETING THE STATED DESIGN CRITERIA.

LANDS' END

STORE NO:
TBD

PROJECT LOCATION:
CONGRESSIONAL PLAZA
1667 ROCKVILLE PIKE
SPACE #06
ROCKVILLE, MD 20852

DESIGN TYPE:
-

REVISIONS:

REQUIRED BY:	DATE
1 CLT CLIENT, LANDLORD & B.D. COMMENTS	07/19/2019

* INDICATES NO REVISION TO THIS SHEET

Professional Certification

I certify that these documents were prepared or approved by me, and that I am a duly licensed architect under the laws of the State of Maryland license number 17246, expiration date February 28, 2021 .

FINISH PLAN

DRAWN BY: JAW CHECKED BY: BRW/ELM/RHW

DATE ISSUED: 06/07/2019
PROJECT NO: 190148
DRAWING NO:
A5.2

SALES FLOOR FIXTURE LEGEND

QTY.	BLOCK	DESCRIPTION
1		ENTRY TABLE
5		NESTED PARSONS TABLE: 5 PARSONS BUNKS: 9
4		60" TABLE
47		T-STAND
29		WARDROBE BAR
5		HANG/FOLD
3		LARGE GLASS TABLE AND NESTING BENCHES
9		SMALL BUNK
8		LARGE BUNK
12		A-FRAME SMALL (FREE STANDING - 2 BACK TO BACK)
1		KIOSK
1	24"	ACCESSIBLE FITTING ROOM BENCH
4	36"	FITTING ROOM BENCH
0		LOUNGE COFFEE TABLE
0		POUFS
11		ROUND TABLE BUNKS
76		PERIMETER FRAME (AT WALL): 39 PERIMETER BAY ONLY: 37
1		FIREPLACE

FIXTURE SCHEDULE — V

#	DESCRIPTION
1	HANDICAP ACCESSIBLE FORWARD APPROACH CASHWRAP - REFER TO SHEET A10.4 FOR MORE INFORMATION
2	ACCESSIBLE MANEUVERING SPACE
3	TACTILE "EXIT" SIGN - REFER TO DETAIL V/A5.1
4	FOR EMERGENCY LIGHTING - REFER TO REFLECTED CEILING PLAN AND ELECTRICAL DRAWINGS FOR MORE INFORMATION
5	EXIT SIGNAGE - REFER TO REFLECTED CEILING PLAN AND ELECTRICAL DRAWINGS FOR MORE INFORMATION
6	STATIC & MOBILE SHELVING
7	FIRE EXTINGUISHER - REFER TO SHEET A2.1 FOR MORE INFORMATION
8	24x42" ACCESSIBLE FITTING ROOM BENCH TO BE SECURELY FASTENED TO WALL
9	ACCESSIBILITY SIGNAGE TO COMPLY WITH LOCAL CODES

CODED NOTES — U

SYMBOL LEGEND

	INDICATES TRAVEL DISTANCE FROM A GIVEN POINT TO AN EXIT
	EXIT SIGN
	DIRECTIONAL EXIT SIGN
	WALL MOUNTED EMERGENCY LIGHT
	~~EMERGENSY/EXIT SIGN SIGNS~~
88"	INDICATES ADJUSTED EXIT DOOR WIDTH IN INCHES

1. GC TO COORDINATE WITH MILLWORK CONTRACTOR FOR LOCATION OF BLOCKING AS REQUIRED.
2. FIXTURES SHALL MAINTAIN THE INDICATED CLEARANCES FIXTURES FOR INTENT OF DESIGN ONLY. GC TO COORDINATE WITH OWNER FOR EXACT PLACEMENT OF FIXTURES. BUT SHALL MAINTAIN 36" MIN. CLEAR AISLE BETWEEN FIXTURES AND / OR FIXTURES AND ADJACENT WALLS 44" WIDE EGRESS PATH TO EXIT DOORS.
3. FIXTURES FURNISHED BY OWNER'S FIXTURE VENDOR AND INSTALLED BY GC (UNLESS OTHERWISE NOTED). COORDINATE ALL FIXTURE LOCATIONS WITH FIXTURE VENDOR.
4. DO NOT SCALE DRAWINGS.

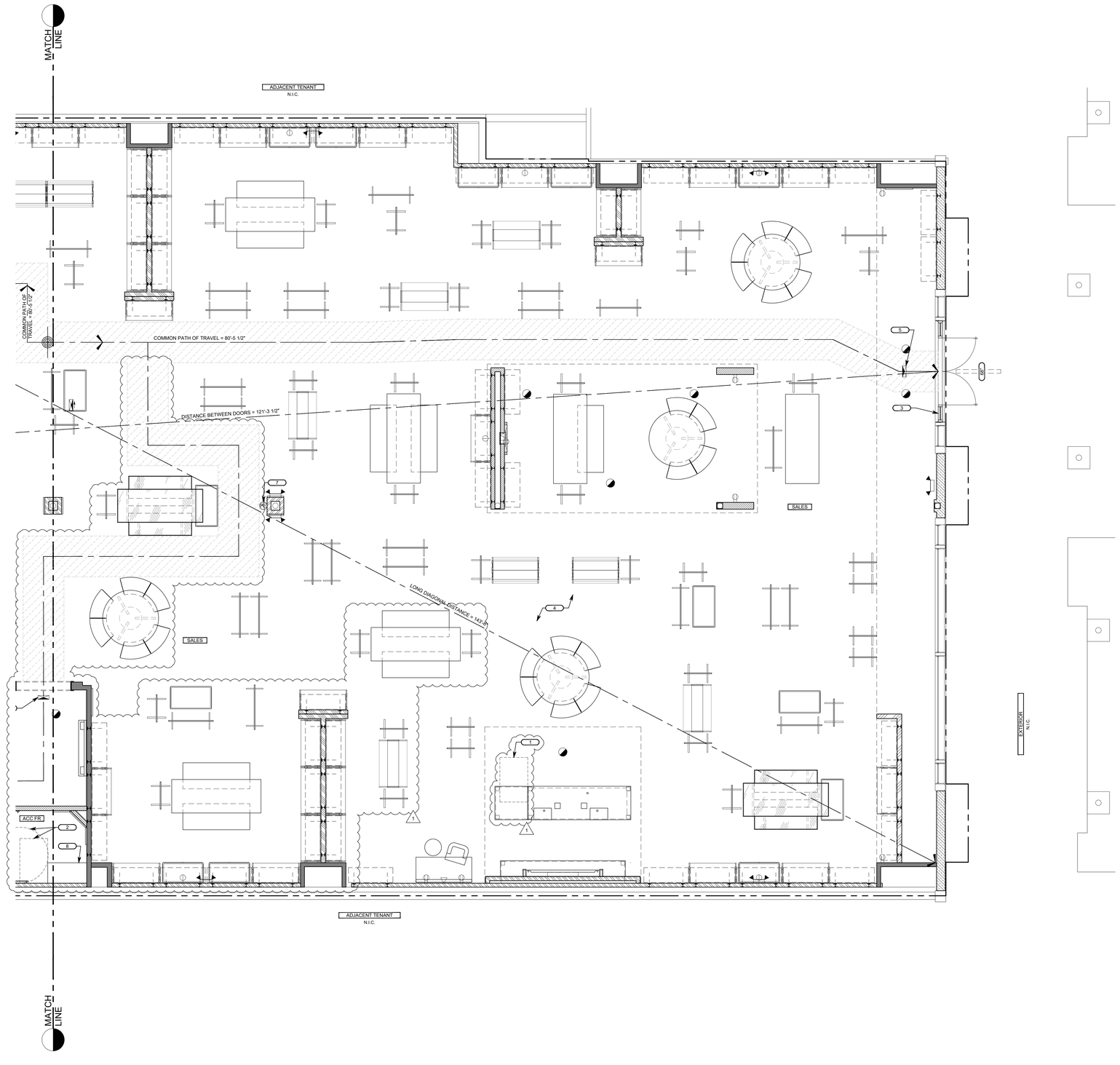

NORTH

OWNER:

5A LANDS' END LANE
DODGEVILLE, WI 53595

ARCHITECT / ENGINEER:

SHREMSHOCK
Shremshock Architects, Inc.
7400 W. Campus Rd. Suite 150 New Albany, OH 43054
t: 614 545-4550 | f: 614 545-4555 | shremshock.com
Gerald S. Shremshock, Architect
Timothy J. Shremshock, Architect

©2019 THE ARCHITECT / ENGINEER ASSUMES NO RESPONSIBILITY FOR THE USE OF THESE PLANS FOR ANY PROJECT OTHER THAN SPECIFICALLY AUTHORIZED BY THEM AND SIGNED AND SEALED FOR SUCH SPECIFIC LOCATION IN THE STATE, PROVINCE OR TERRITORY SHOWN ON THE SEAL. THIS BUILDING USE IS ONLY APPLICABLE IN AREAS MEETING THE STATED DESIGN CRITERIA.

LANDS' END

STORE NO:
TBD

PROJECT LOCATION:
CONGRESSIONAL PLAZA
1667 ROCKVILLE PIKE
SPACE #06
ROCKVILLE, MD 20852

DESIGN TYPE:
-

REVISIONS:

REQUIRED BY:		DATE
1. CLT	CLIENT, LANDLORD & B.D. COMMENTS	07/19/2019

* INDICATES NO REVISION TO THIS SHEET

Professional Certification

I certify that these documents were prepared or approved by me, and that I am a duly licensed architect under the laws of the State of Maryland license number 17246, expiration date February 28, 2021.

FIXTURE / LIFE SAFETY PLAN & FIXTURE SCHEDULE

DRAWN BY: JAW CHECKED BY: BRW/ELM/RHW

DATE ISSUED: 06/07/2019
PROJECT NO: 190148
DRAWING NO:
A6.1

SYMBOL LEGEND AND GENERAL NOTES — T

FIXTURE/LIFE SAFETY PLAN — 1/4" = 1'-0" — A

NOT USED | V

#	DESCRIPTION
1	HANDICAP ACCESSIBLE FORWARD APPROACH CASHWRAP - REFER TO SHEET A10.4 FOR MORE INFORMATION
2	ACCESSIBLE MANEUVERING SPACE
3	TACTILE "EXIT" SIGN - REFER TO DETAIL V/A5.1
4	FOR EMERGENCY LIGHTING - REFER TO REFLECTED CEILING PLAN AND ELECTRICAL DRAWINGS FOR MORE INFORMATION
5	EXIT SIGNAGE - REFER TO REFLECTED CEILING PLAN AND ELECTRICAL DRAWINGS FOR MORE INFORMATION
6	STATIC & MOBILE SHELVING
7	FIRE EXTINGUISHER - REFER TO SHEET A2.1 FOR MORE INFORMATION
8	24x42" ACCESSIBLE FITTING ROOM BENCH TO BE SECURELY FASTENED TO WALL
9	ACCESSIBILITY SIGNAGE TO COMPLY WITH LOCAL CODES

CODED NOTES (#) | U

SYMBOL LEGEND

	INDICATES TRAVEL DISTANCE FROM A GIVEN POINT TO AN EXIT
	EXIT SIGN
	DIRECTIONAL EXIT SIGN
	WALL MOUNTED EMERGENCY LIGHT
	~~EMERGENCY/EXIT SIGN COMBO~~
(##")	INDICATES ADJUSTED EXIT DOOR WIDTH IN INCHES

1. GC TO COORDINATE WITH MILLWORK CONTRACTOR FOR LOCATION OF BLOCKING AS REQUIRED.
2. FIXTURES SHALL MAINTAIN THE INDICATED CLEARANCES FIXTURES FOR INTENT OF DESIGN ONLY. GC TO COORDINATE WITH OWNER FOR EXACT PLACEMENT OF FIXTURES. BUT SHALL MAINTAIN 36" MIN. CLEAR AISLE BETWEEN FIXTURES AND / OR FIXTURES AND ADJACENT WALLS 44" WIDE EGRESS PATH TO EXIT DOORS.
3. FIXTURES FURNISHED BY OWNER'S FIXTURE VENDOR AND INSTALLED BY GC (UNLESS OTHERWISE NOTED). COORDINATE ALL FIXTURE LOCATIONS WITH FIXTURE VENDOR.
4. DO NOT SCALE DRAWINGS.

SYMBOL LEGEND AND GENERAL NOTES | T

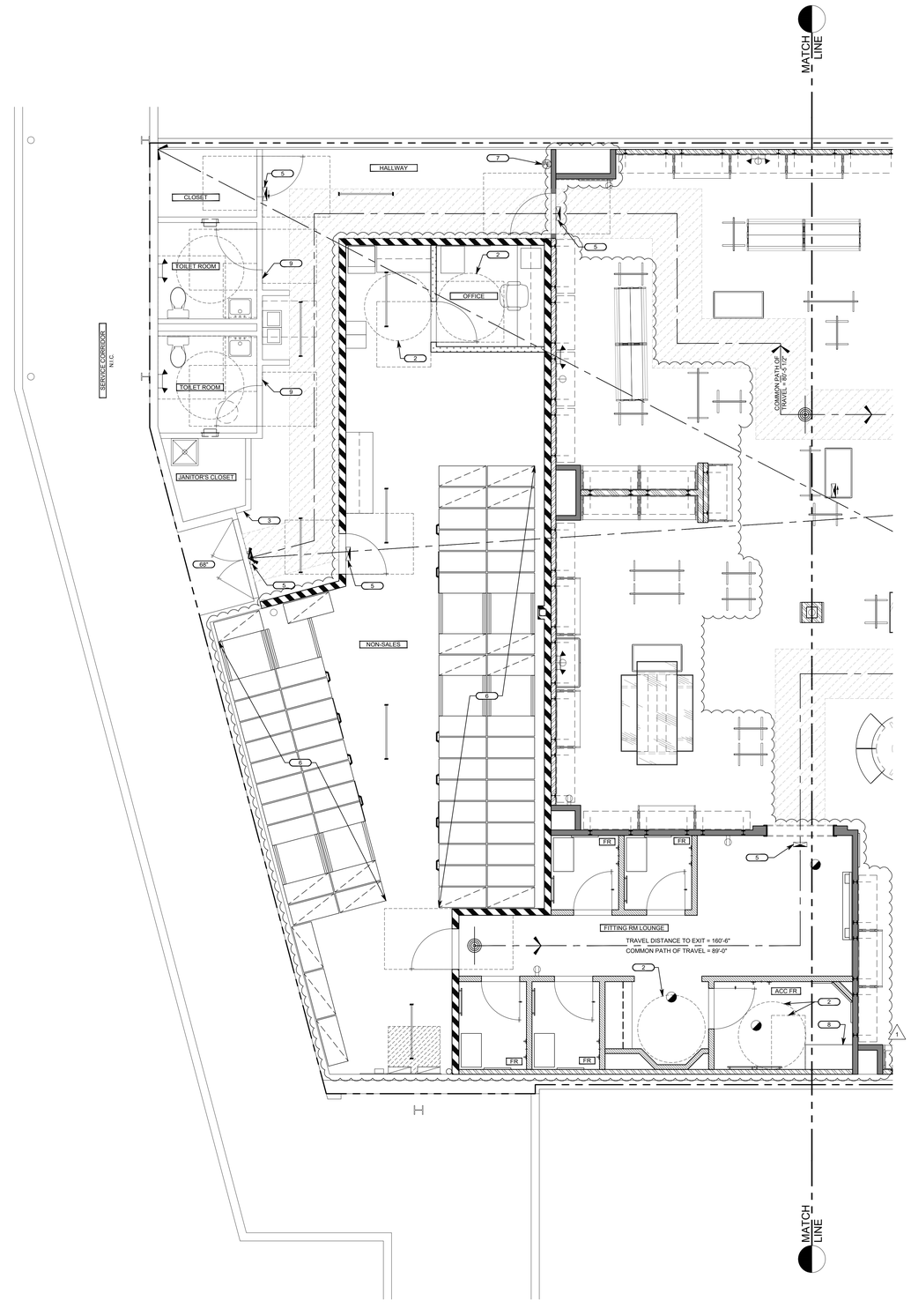

NORTH

FIXTURE/LIFE SAFETY PLAN | 1/4" = 1'-0" - | A

OWNER:

5A LANDS' END LANE
DODGEVILLE, WI 53595

ARCHITECT / ENGINEER:

SHREMSHOCK
Shremshock Architects, Inc.
7400 W. Campus Rd. Suite 150 New Albany, OH 43054
t: 614 545 4550 | f: 614 545 4555 | shremshock.com
Gerald S. Shremshock, Architect
Timothy J. Shremshock, Architect

©2019 THE ARCHITECT / ENGINEER ASSUMES NO RESPONSIBILITY FOR THE USE OF THESE PLANS OR ANY PROJECT OTHER THAN SPECIFICALLY AUTHORIZED BY THEM AND SIGNED AND SEALED FOR SUCH SPECIFIC LOCATION IN THE STATE, PROVINCE OR TERRITORY SHOWN ON THE SEAL. THIS BUILDING USE IS ONLY APPLICABLE IN AREAS MEETING THE STATED DESIGN CRITERIA.

LANDS' END

STORE NO:
TBD

PROJECT LOCATION:
CONGRESSIONAL PLAZA
1667 ROCKVILLE PIKE
SPACE #06
ROCKVILLE, MD 20852

DESIGN TYPE:
-

REVISIONS:

REQUIRED BY:		DATE
1.	CLT CLIENT, LANDLORD & B.D. COMMENTS	07/19/2019

* INDICATES NO REVISION TO THIS SHEET

Professional Certification

I certify that these documents were prepared or approved by me, and that I am a duly licensed architect under the laws of the State of Maryland license number 17246, expiration date February 28, 2021.

FIXTURE / LIFE SAFETY PLAN & FIXTURE SCHEDULE

DRAWN BY: JAW CHECKED BY: BRW/ELM/RHW

DATE ISSUED: 06/07/2019
PROJECT NO: 190148

DRAWING NO:
A6.2

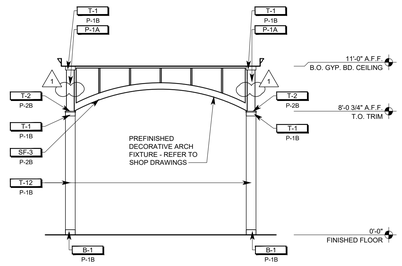

INTERIOR ELEVATION 1/4" = 1'-0" - W

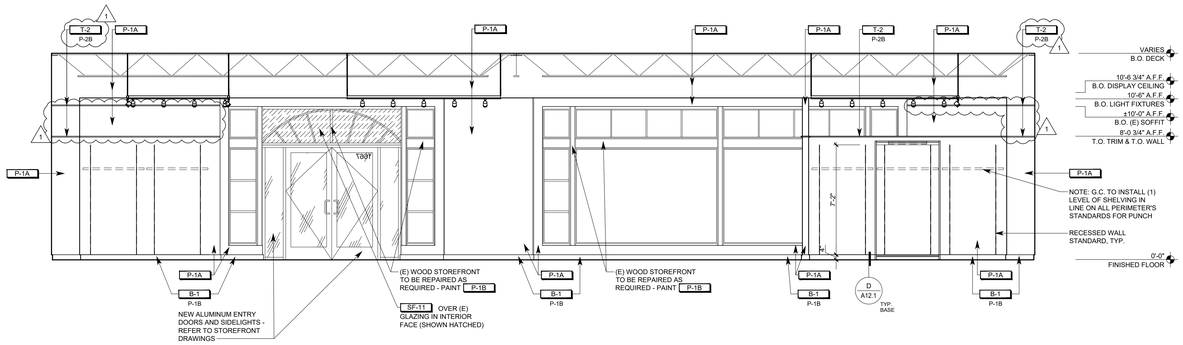

INTERIOR ELEVATION 1/4" = 1'-0" - D

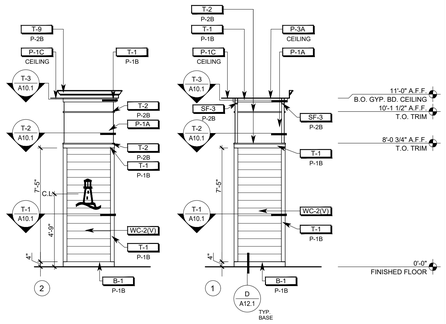

INTERIOR ELEVATION 1/4" = 1'-0" - V

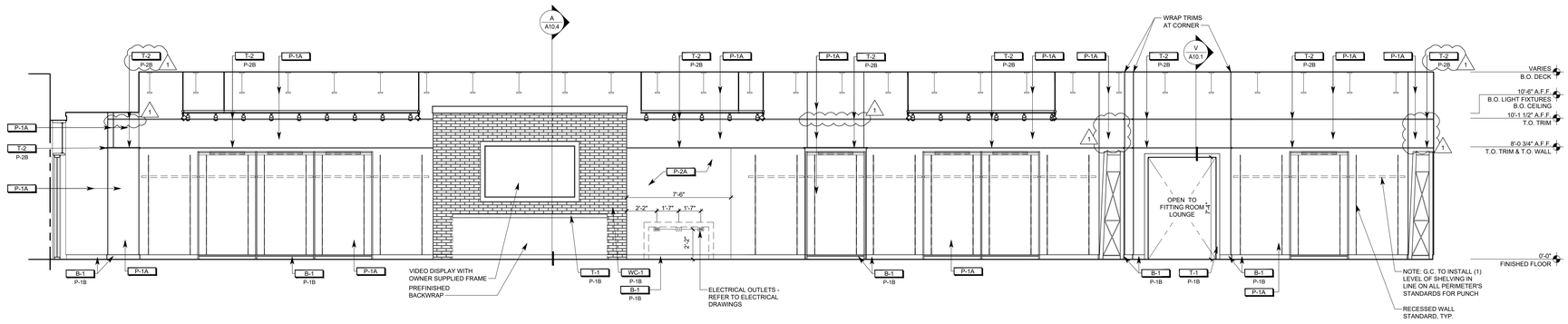

INTERIOR ELEVATION 1/4" = 1'-0" - C

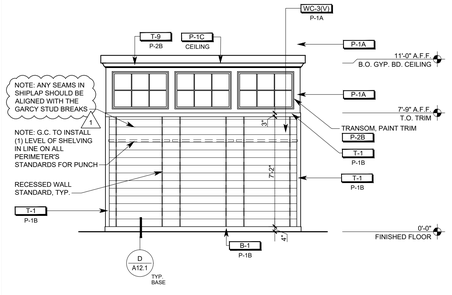

INTERIOR ELEVATION 1/4" = 1'-0" - U

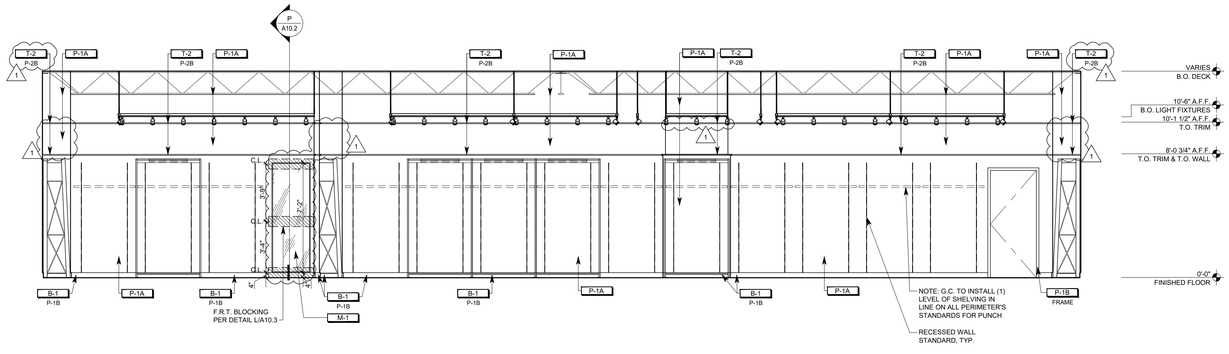

INTERIOR ELEVATION 1/4" = 1'-0" - B

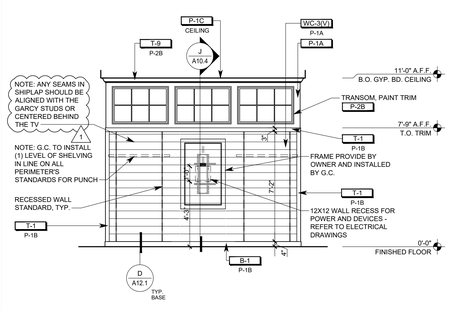

INTERIOR ELEVATION 1/4" = 1'-0" - T

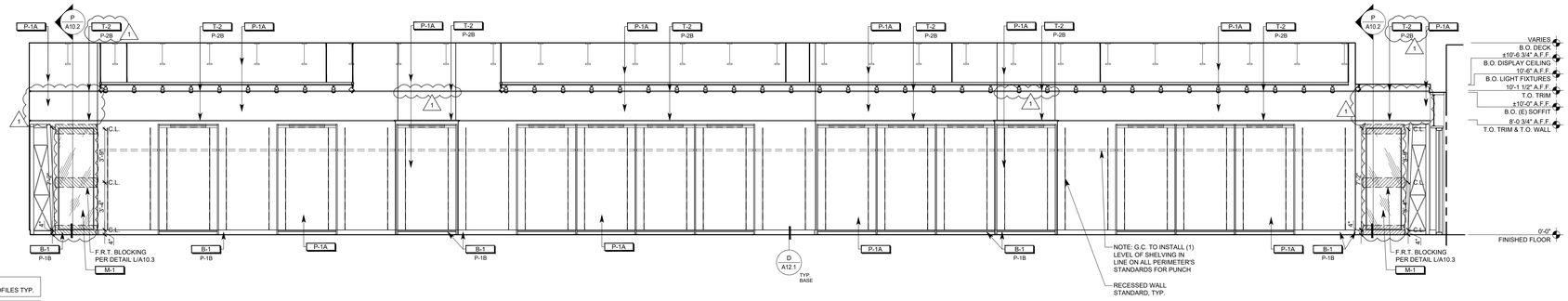

NOTE:
REFER TO A/A10.1 FOR TRIM PROFILES TYP.

NOTE:
REFER TO G1.3 FOR FINISH SCHEDULE TYP.

INTERIOR ELEVATION 1/4" = 1'-0" - A

OWNER:

5A LANDS' END LANE
DODGEVILLE, WI 53595

ARCHITECT / ENGINEER:

SHREMSHOCK
Shremshock Architects, Inc.
7400 W. Campus Rd. Suite 150 New Albany, OH 43054
t: 614 545-4555 | f: 614 545-4550 | shremshock.com
Gerald S. Shremshock, Architect
Timothy J. Shremshock, Architect

©2019 THE ARCHITECT / ENGINEER ASSUMES NO RESPONSIBILITY FOR THE USE OF THESE PLANS OR THESE PLANS FOR ANY PROJECT OTHER THAN SPECIFICALLY AUTHORIZED BY THEM AND SIGNED AND SEALED FOR SUCH SPECIFIC LOCATION IN THE STATE, PROVINCE OR TERRITORY SHOWN ON THE SEAL. THIS BUILDING USE IS ONLY APPLICABLE IN AREAS MEETING THE STATED DESIGN CRITERIA.

LANDS' END

STORE NO:
TBD

PROJECT LOCATION:
CONGRESSIONAL PLAZA
1667 ROCKVILLE PIKE
SPACE #06
ROCKVILLE, MD 20852

DESIGN TYPE:
-

REVISIONS:

REQUIRED BY:		DATE
1	CLT CLIENT, LANDLORD & B.O. COMMENTS	07/19/2019

* INDICATES NO REVISION TO THIS SHEET

Professional Certification

I certify that these documents were prepared or approved by me, and that I am a duly licensed architect under the laws of the State of Maryland license number 17246, expiration date February 28, 2021.

INTERIOR ELEVATIONS

DRAWN BY: JH CHECKED BY: BRW/ELM/RHW

DATE ISSUED: 06/07/2019

PROJECT NO: 190148

DRAWING NO:
A7.1

NOT USED W

NOT USED S

NOT USED M

INTERIOR ELEVATION 1/4" = 1'-0" - D

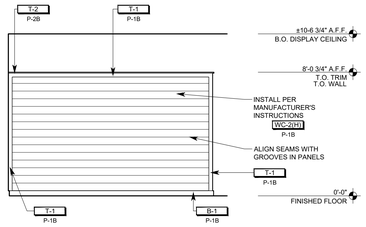

NOT USED V

NOT USED R

NOT USED L

INTERIOR ELEVATION 1/4" = 1'-0" - C

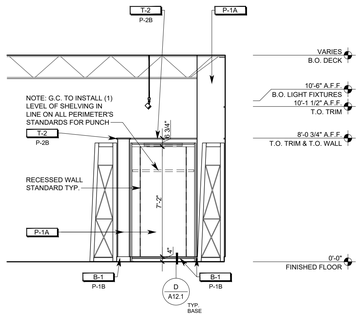

NOT USED U

NOT USED P

NOT USED K

INTERIOR ELEVATION 1/4" = 1'-0" - B

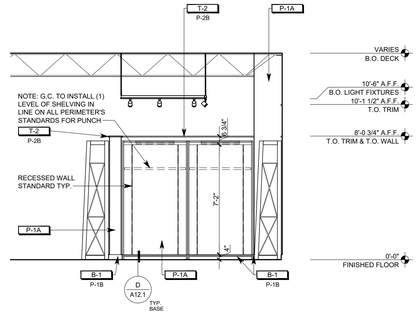

NOT USED T

NOT USED N

NOT USED J

INTERIOR ELEVATION 1/4" = 1'-0" - A

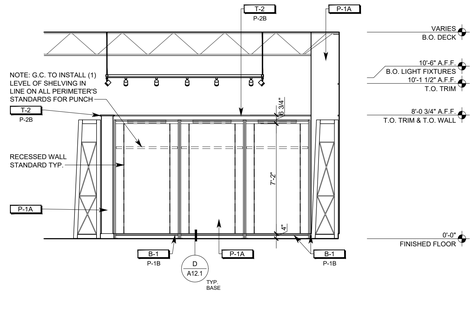

NOTE:
REFER TO A/A10.1 FOR TRIM PROFILES TYP.

NOTE:
REFER TO G1.3 FOR FINISH SCHEDULE TYP.

OWNER:

5A LANDS' END LANE
DODGEVILLE, WI 53595

ARCHITECT / ENGINEER:

SHREMSHOCK
Shremshock Architects, Inc.
7400 W. Campus Rd. Suite 150 New Albany, OH 43054
t: 614 545-4550 | f: 614 545-4555 | shremshock.com
Gerald S. Shremshock, Architect
Timothy J. Shremshock, Architect

©2019 THE ARCHITECT / ENGINEER ASSUMES NO RESPONSIBILITY FOR THE USE OF THESE PLANS FOR ANY PROJECT OTHER THAN SPECIFICALLY AUTHORIZED BY THEM AND SIGNED AND SEALED FOR SUCH SPECIFIC LOCATION IN THE STATE, PROVINCE OR TERRITORY SHOWN ON THE SEAL. THIS BUILDING USE IS ONLY APPLICABLE IN AREAS MEETING THE STATED DESIGN CRITERIA.

LANDS' END

STORE NO:
TBD

PROJECT LOCATION:
CONGRESSIONAL PLAZA
1667 ROCKVILLE PIKE
SPACE #06
ROCKVILLE, MD 20852

DESIGN TYPE:
-

REVISIONS:

REQUIRED BY:		DATE
1	CLIENT, LANDLORD & B.O. COMMENTS	07/19/2019

* INDICATES NO REVISION TO THIS SHEET

Professional Certification

I certify that these documents were prepared or approved by me, and that I am a duly licensed architect under the laws of the State of Maryland license number 17246, expiration date February 28, 2021.

INTERIOR ELEVATIONS

DRAWN BY: JH CHECKED BY: BRW/ELM/RHW

DATE ISSUED: 06/07/2019

PROJECT NO: 190148

DRAWING NO:
A7.2

STOREFRONT SYSTEM SPEC:
BLUE: API - CUSTOM BLUE POWDER COAT: 0468PCE (MATTE)
WHITE: API - CUSTOM WHITE POWDER COAT: 0298PCE (MATTE)

SIDEWALK NOTE: (E) SIDEWALK BY LANDLORD (N.I.C.) DO NOT DISTURB. G.C. TO VERIFY SLAB SLOPES AWAY FROM STOREFRONT (1/8" PER FOOT MIN. / 1/4" PER FOOT MAX.). IF SLOPE DIFFERS, THEN G.C. MUST CONTACT PROJECT MANAGER AND ARCHITECT FOR RESOLUTION AND DIRECTION ON HOW TO PROCEED.

NOTE: G.C. TO PROVIDE PRESERVATIVE TREATED WOOD BLOCKING AND BACKING AS REQUIRED AT EXTERIOR STOREFRONT CONSTRUCTION.

PAINT EXISTING BLUE SIGN BAND AND BLUE STOREFRONT P-2B - SHOWN SHADED

STOREFRONT SIGNAGE TO BE SUBMITTED UNDER SEPARATE COVER

NOTE: ALL VERTICAL DIMENSIONS ARE FROM TOP OF (E) INTERIOR CONCRETE SLAB (U.N.O.)

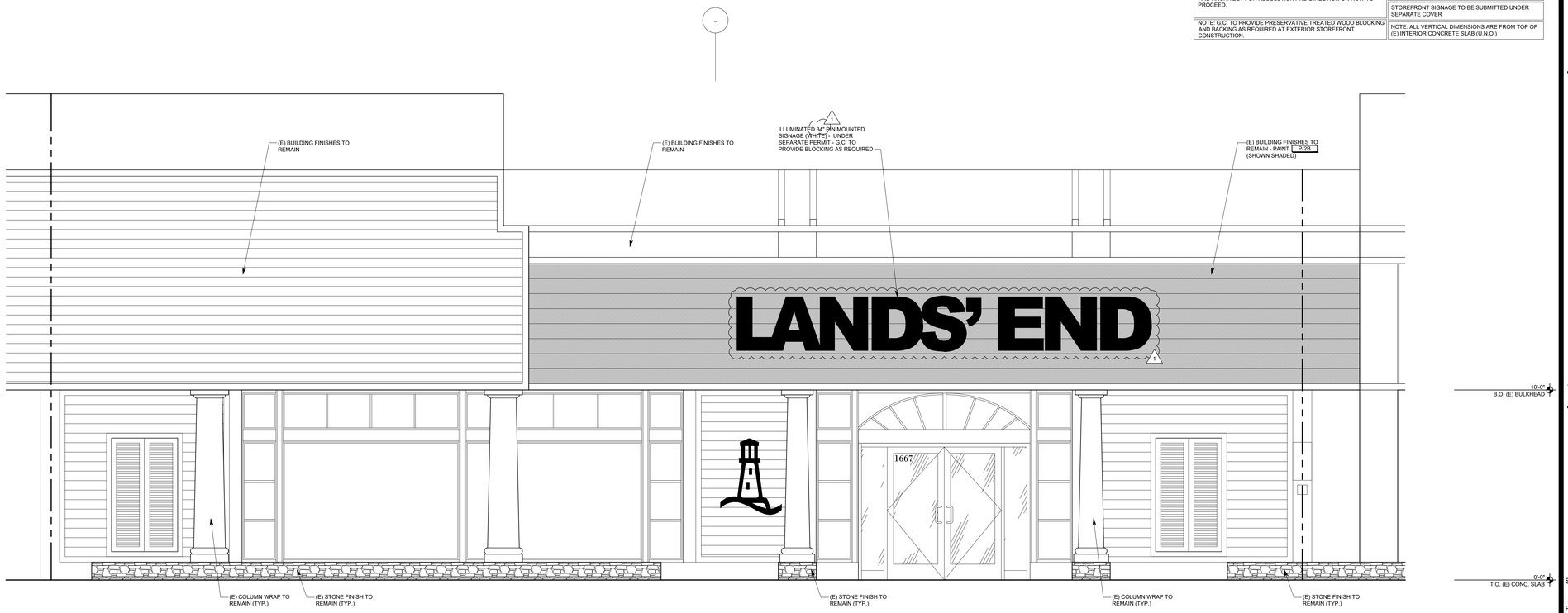

STOREFRONT ELEVATION — 3/8" = 1'-0" — C

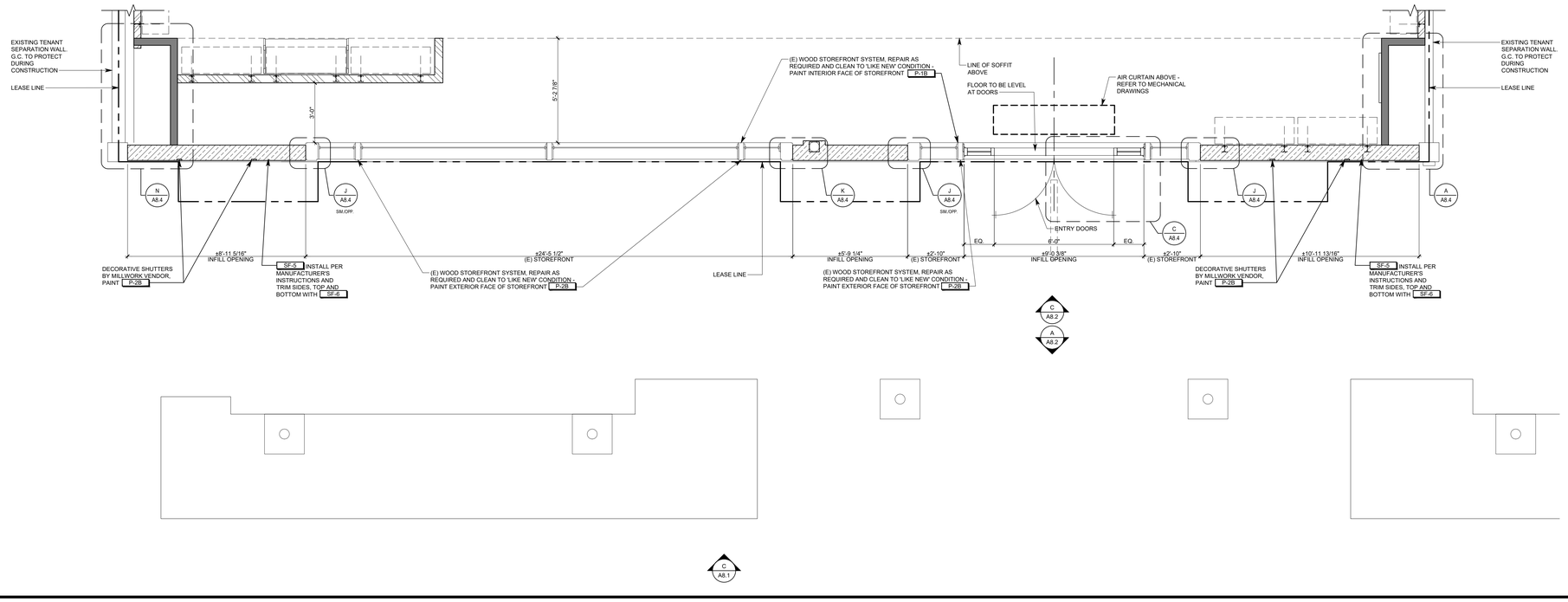

STOREFRONT PLAN — 3/8" = 1'-0" — A

OWNER:

5A LANDS' END LANE
DODGEVILLE, WI 53595

ARCHITECT / ENGINEER:

SHREMSHOCK
Shremshock Architects, Inc.
7400 W. Campus Rd. Suite 150 New Albany, OH 43054
t: 614 545-4550 | f: 614 545-4555 | shremshock.com
Gerald S. Shremshock, Architect
Timothy J. Shremshock, Architect

©2019 THE ARCHITECT / ENGINEER ASSUMES NO RESPONSIBILITY FOR THE USE OF THESE PLANS FOR ANY PROJECT OTHER THAN SPECIFICALLY AUTHORIZED BY THEM AND SIGNED AND SEALED FOR SUCH SPECIFIC LOCATION IN THE STATE, PROVINCE OR TERRITORY SHOWN ON THE SEAL. THIS BUILDING USE IS ONLY APPLICABLE IN AREAS MEETING THE STATED DESIGN CRITERIA.

STORE NO:
TBD

PROJECT LOCATION:
CONGRESSIONAL PLAZA
1667 ROCKVILLE PIKE
SPACE #06
ROCKVILLE, MD 20852

DESIGN TYPE:
-

REVISIONS:

REQUIRED BY:		DATE
1	CLT CLIENT, LANDLORD & B.D. COMMENTS	07/19/2019

* INDICATES NO REVISION TO THIS SHEET

Professional Certification

I certify that these documents were prepared or approved by me, and that I am a duly licensed architect under the laws of the State of Maryland license number 17246, expiration date February 28, 2021.

STOREFRONT PLAN & ELEVATION

DRAWN BY: BRW CHECKED BY: ELM/RHW

DATE ISSUED: 06/07/2019
PROJECT NO: 190148

DRAWING NO:
A8.1

STOREFRONT SYSTEM SPEC:
BLUE: API - CUSTOM BLUE POWDER COAT: 0468PCE (MATTE)
WHITE: API - CUSTOM WHITE POWDER COAT: 0298PCE (MATTE)

SIDEWALK NOTE: (E) SIDEWALK BY LANDLORD (N.I.C.) DO NOT DISTURB. G.C. TO VERIFY SLAB SLOPES AWAY FROM STOREFRONT (1/8" PER FOOT MIN. / 1/4" PER FOOT MAX.). IF SLOPE DIFFERS, THEN G.C. MUST CONTACT PROJECT MANAGER AND ARCHITECT FOR RESOLUTION AND DIRECTION ON HOW TO PROCEED.

NOTE: G.C. TO PROVIDE PRESERVATIVE TREATED WOOD BLOCKING AND BACKING AS REQUIRED AT EXTERIOR STOREFRONT CONSTRUCTION.

STOREFRONT SIGNAGE TO BE SUBMITTED UNDER SEPARATE COVER

NOTE: ALL VERTICAL DIMENSIONS ARE FROM TOP OF (E) INTERIOR CONCRETE SLAB (U.N.O.)

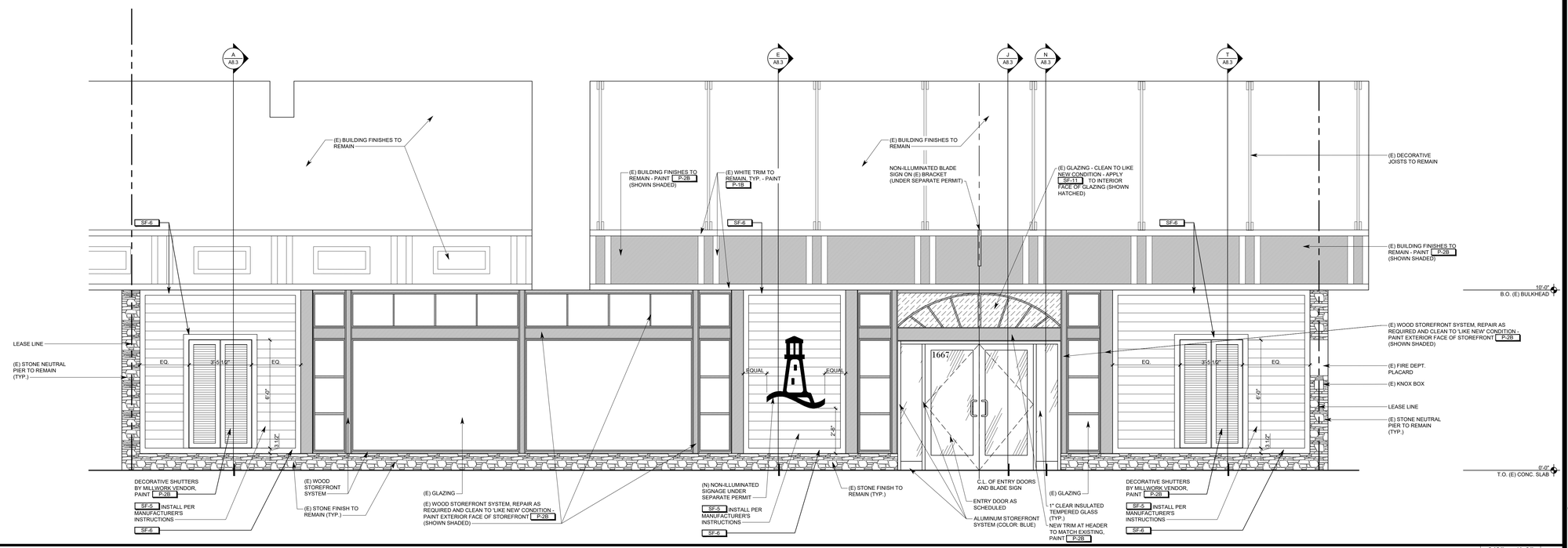

STOREFRONT ELEVATION — 3/8" = 1'-0" — C

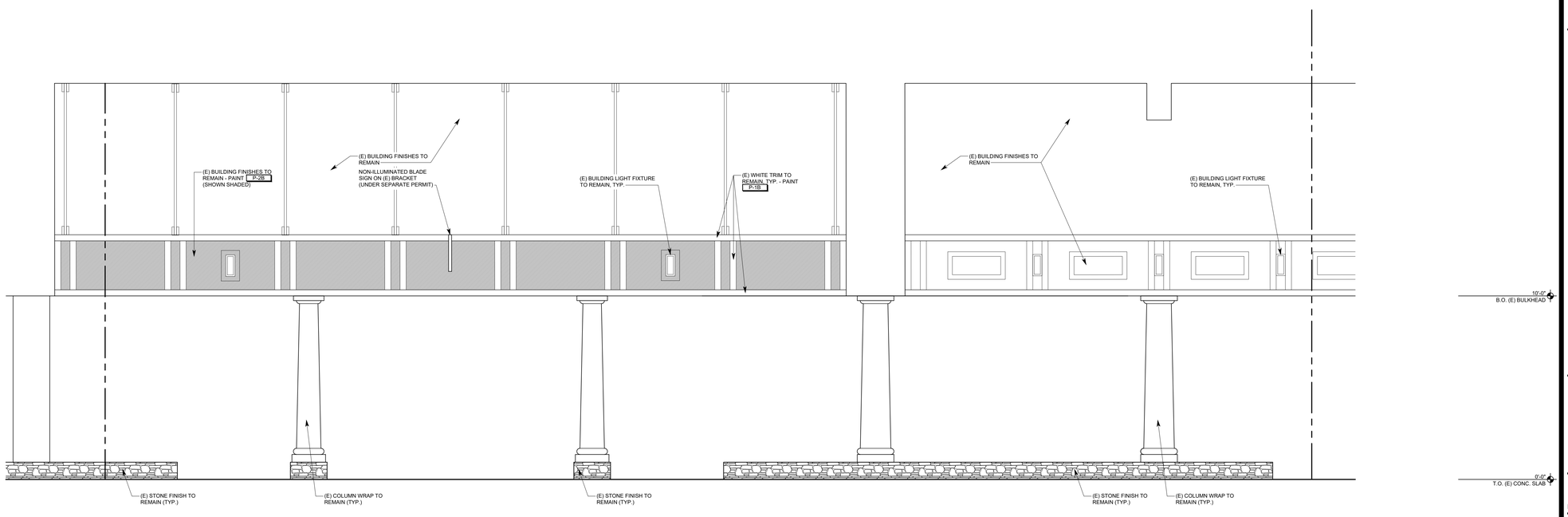

STOREFRONT ELEVATION — 3/8" = 1'-0" — A

OWNER:

5A LANDS' END LANE
DODGEVILLE, WI 53595

ARCHITECT / ENGINEER:

SHREMSHOCK
Shremshock Architects, Inc.
7400 W. Campus Rd. Suite 150 New Albany, OH 43054
t: 614 545-4555 | f: 614 545-4550 | shremshock.com
Gerald S. Shremshock, Architect
Timothy J. Shremshock, Architect

©2019 THE ARCHITECT / ENGINEER ASSUMES NO RESPONSIBILITY FOR THE USE OF THESE PLANS OR THESE PLANS FOR ANY PROJECT OTHER THAN SPECIFICALLY AUTHORIZED BY THEM AND SIGNED AND SEALED FOR SUCH SPECIFIC LOCATION IN THE STATE, PROVINCE OR TERRITORY SHOWN ON THE SEAL. THIS BUILDING USE IS ONLY APPLICABLE IN AREAS MEETING THE STATED DESIGN CRITERIA.

LANDS' END

STORE NO:
TBD

PROJECT LOCATION:
CONGRESSIONAL PLAZA
1667 ROCKVILLE PIKE
SPACE #06
ROCKVILLE, MD 20852

DESIGN TYPE:
-

REVISIONS:

REQUIRED BY:		DATE
1	CLIENT, LANDLORD & B.D. COMMENTS	07/19/2019

* INDICATES NO REVISION TO THIS SHEET

Professional Certification

I certify that these documents were prepared or approved by me, and that I am a duly licensed architect under the laws of the State of Maryland license number 17246, expiration date February 28, 2021.

STOREFRONT ELEVATIONS

DRAWN BY: BRW CHECKED BY: ELM/RHW

DATE ISSUED: 06/07/2019

PROJECT NO: 190148

DRAWING NO:
A8.2

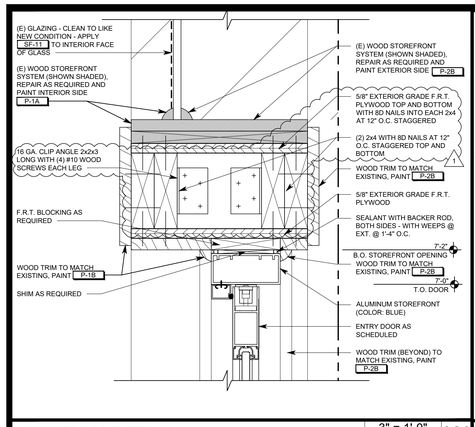

SECTION DETAIL 3" = 1'-0" - W

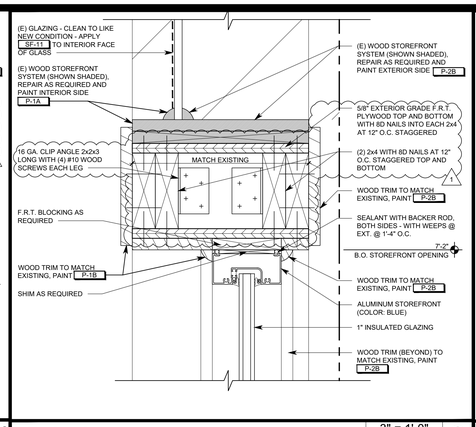

SECTION DETAIL 3" = 1'-0" - S

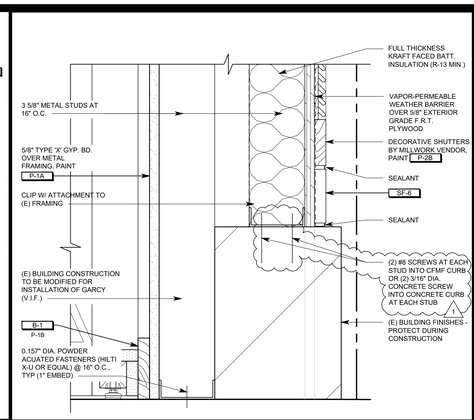

SECTION DETAIL 3" = 1'-0" - M

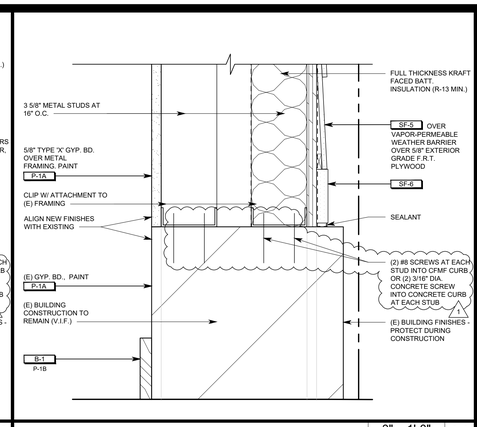

SECTION DETAIL 3" = 1'-0" - H

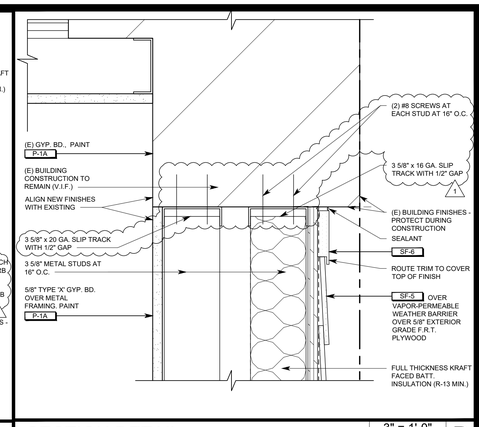

SECTION DETAIL 3" = 1'-0" - D

NOT USED - - V

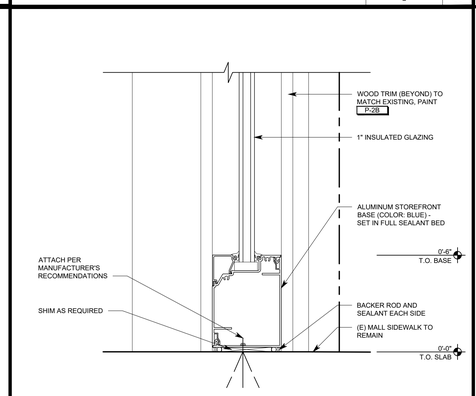

SECTION DETAIL 3" = 1'-0" - R

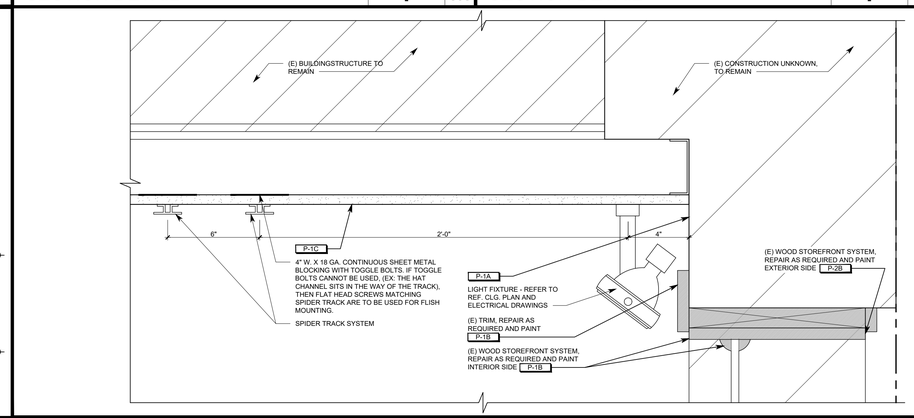

SECTION DETAIL 3" = 1'-0" - G

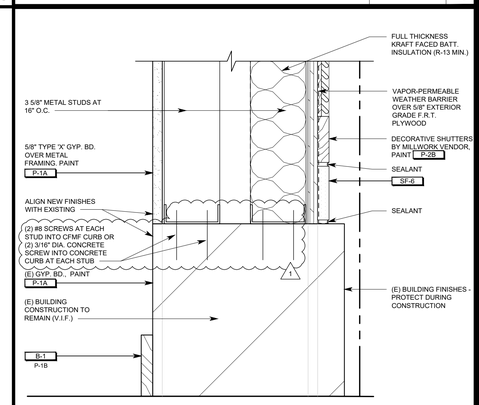

SECTION DETAIL 1 1/2" = 1'-0" - C

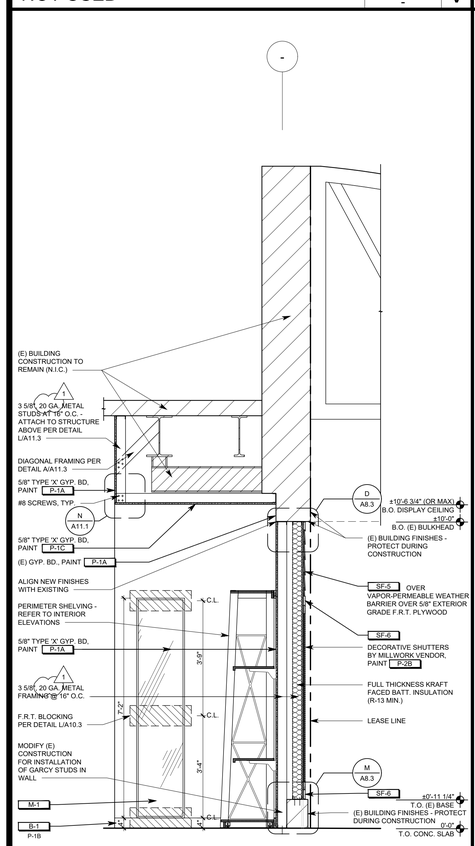

STOREFRONT SECTION 3/8" = 1'-0" - T

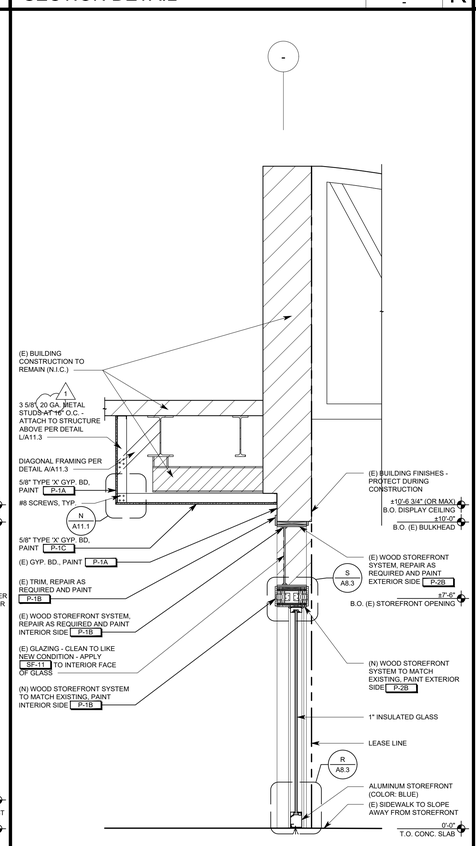

STOREFRONT SECTION 3/8" = 1'-0" - N

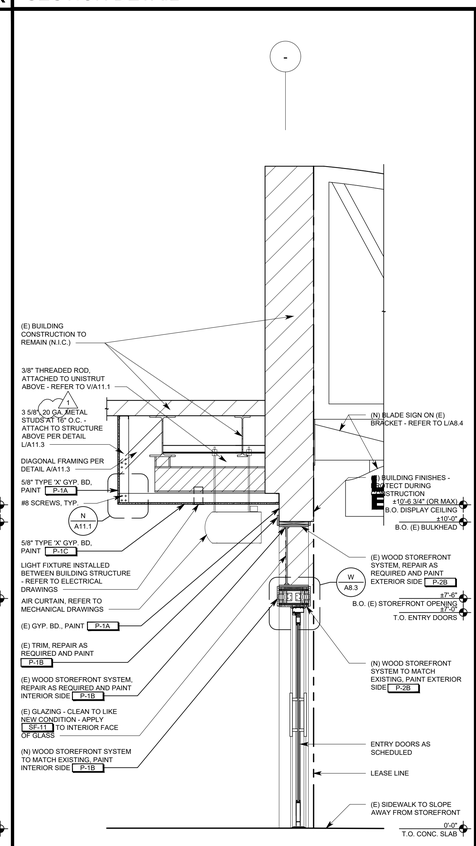

STOREFRONT SECTION 1/2" = 1'-0" - J

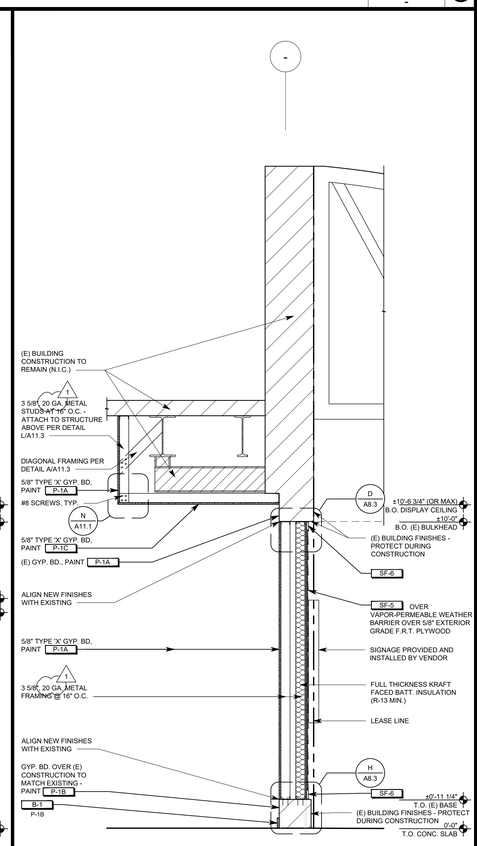

STOREFRONT SECTION 1/2" = 1'-0" - E

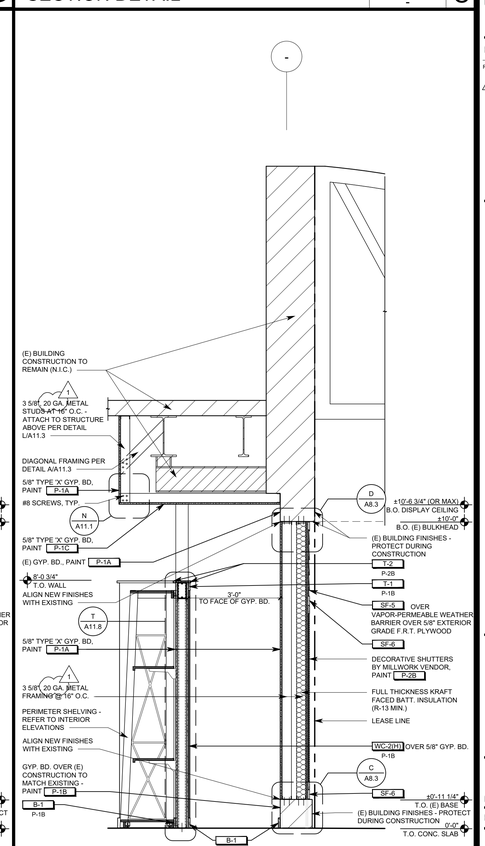

STOREFRONT SECTION 1/2" = 1'-0" - A

OWNER:

5A LANDS' END LANE
DODGEVILLE, WI 53595

ARCHITECT / ENGINEER:

SHREMSHOCK
Shremshock Architects, Inc.
7400 W. Campus Rd. Suite 150 New Albany, OH 43054
t: 614 545-4550 | f: 614 545-4555 | shremshock.com
Gerald S. Shremshock, Architect
Timothy J. Shremshock, Architect

©2019 THE ARCHITECT / ENGINEER ASSUMES NO RESPONSIBILITY FOR THE USE OF THESE PLANS FOR ANY PROJECT OTHER THAN SPECIFICALLY AUTHORIZED BY THEM AND SIGNED AND SEALED FOR SUCH SPECIFIC LOCATION IN THE STATE, PROVINCE OR TERRITORY SHOWN ON THE SEAL. THIS BUILDING USE IS ONLY APPLICABLE IN AREAS MEETING THE STATED DESIGN CRITERIA.

LANDS' END

STORE NO:
TBD

PROJECT LOCATION:
CONGRESSIONAL PLAZA
1667 ROCKVILLE PIKE
SPACE #06
ROCKVILLE, MD 20852

DESIGN TYPE:
-

REVISIONS:

REQUIRED BY:		DATE
1 CLT	CLIENT, LANDLORD & B.D. COMMENTS	07/19/2019

* INDICATES NO REVISION TO THIS SHEET

Professional Certification

I certify that these documents were prepared or approved by me, and that I am a duly licensed Architect under the laws of the State of Maryland license number 17246, expiration date February 28, 2021.

STOREFRONT SECTIONS & DETAILS

DRAWN BY: BRW CHECKED BY: ELM/RHW

DATE ISSUED: 06/07/2019
PROJECT NO: 190148
DRAWING NO:
A8.3

NOT USED | - / - | M

NOT USED | - / - | R

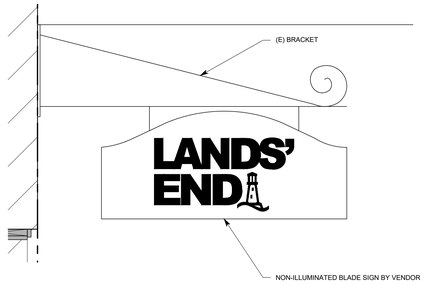

BLADE SIGN DETAIL | N.T.S. / - | L

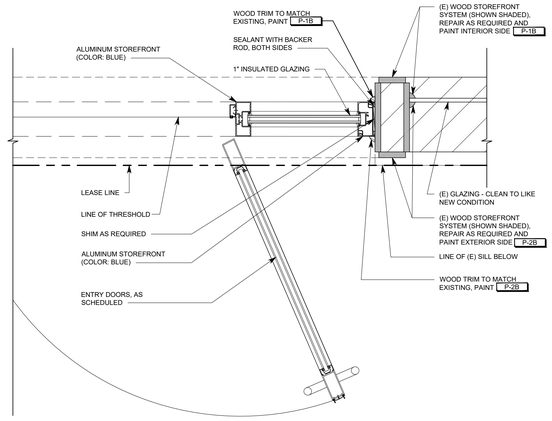

STOREFRONT PLAN DETAIL | 1 1/2" = 1'-0" / - | C

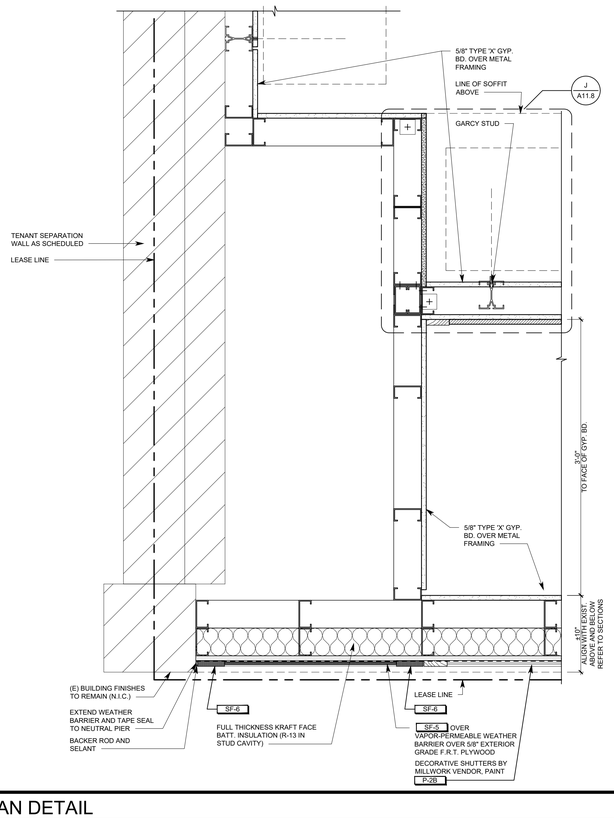

STOREFRONT PLAN DETAIL | 1 1/2" = 1'-0" / - | N

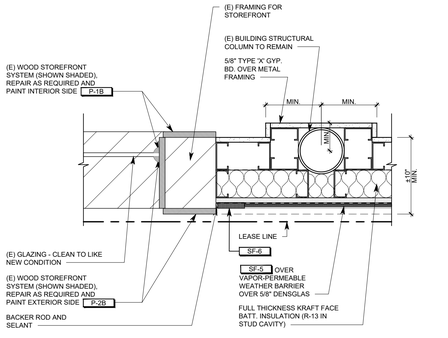

STOREFRONT PLAN DETAIL | 1 1/2" = 1'-0" / - | K

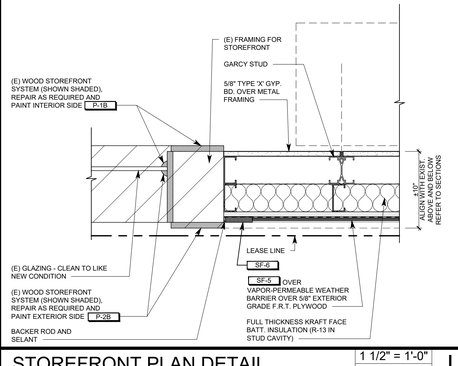

STOREFRONT PLAN DETAIL | 1 1/2" = 1'-0" / - | J

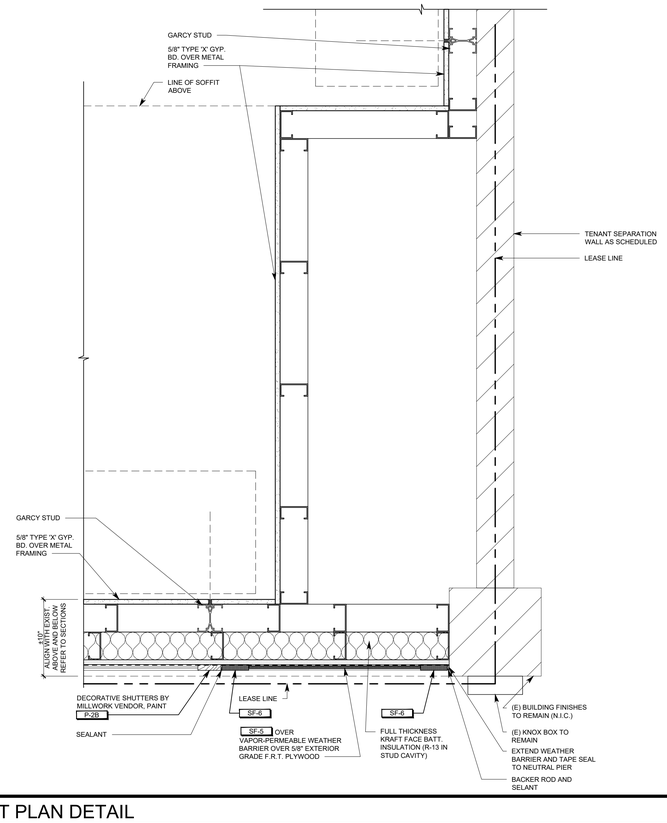

STOREFRONT PLAN DETAIL | 1 1/2" = 1'-0" / - | A

OWNER:

5A LANDS' END LANE
DODGEVILLE, WI 53595

ARCHITECT / ENGINEER:

SHREMSHOCK
Shremshock Architects, Inc.
7400 W. Campus Rd. Suite 150 New Albany, OH 43054
t: 614 545-4550 | f: 614 545-4555 | shremshock.com
Gerald S. Shremshock, Architect
Timothy J. Shremshock, Architect

©2019 THE ARCHITECT / ENGINEER ASSUMES NO RESPONSIBILITY FOR THE USE OF THESE PLANS OR THESE PLANS FOR ANY PROJECT OTHER THAN SPECIFICALLY AUTHORIZED BY THEM AND SIGNED AND SEALED FOR SUCH SPECIFIC LOCATION IN THE STATE, PROVINCE OR TERRITORY SHOWN ON THE SEAL. THIS BUILDING USE IS ONLY APPLICABLE IN AREAS MEETING THE STATED DESIGN CRITERIA.

LANDS' END

STORE NO:
TBD

PROJECT LOCATION:
CONGRESSIONAL PLAZA
1667 ROCKVILLE PIKE
SPACE #06
ROCKVILLE, MD 20852

DESIGN TYPE:
-

REVISIONS:

REQUIRED BY:	DATE
1 CLIENT, LANDLORD & B.O. COMMENTS	07/19/2019

* INDICATES NO REVISION TO THIS SHEET

Professional Certification

I certify that these documents were prepared or approved by me, and that I am a duly licensed architect under the laws of the State of Maryland license number 17246, expiration date February 28, 2021.

STOREFRONT DETAILS

DRAWN BY: BRW CHECKED BY: ELM/RHW

DATE ISSUED: 06/07/2019
PROJECT NO: 190148

DRAWING NO:
A8.4

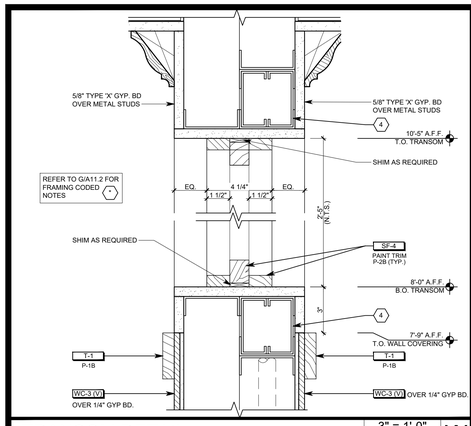

TRANSOM DETAIL 3" = 1'-0" - W

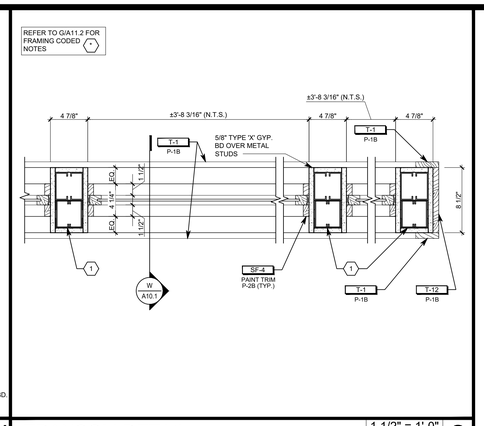

TRANSOM DETAIL 1 1/2" = 1'-0" - S

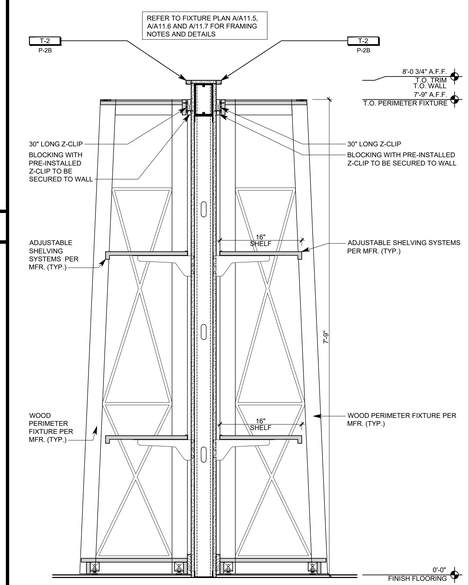

NOTE: DRYWALL SCREWS ARE NOT ACCEPTABLE FOR BLOCKING ATTACHMENT

PERIMETER FIXTURE DETAIL 1" = 1'-0" - L

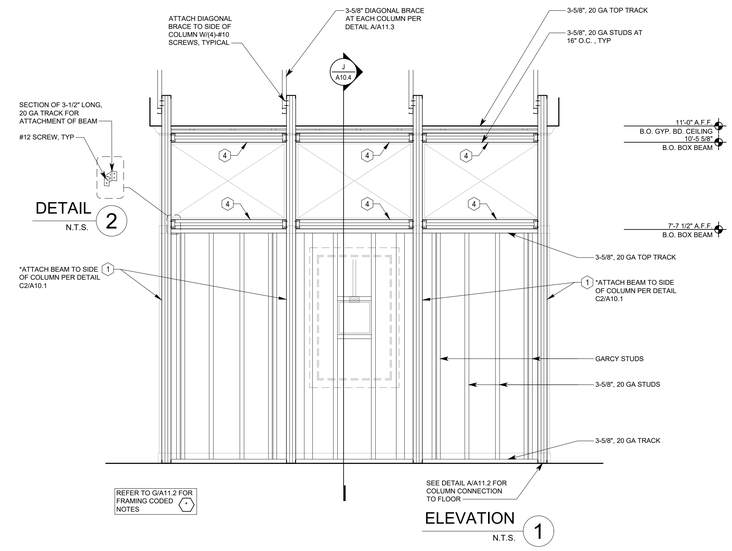

EXPERIENCE WALL FRAMING DETAIL 1/2" = 1'-0" - C

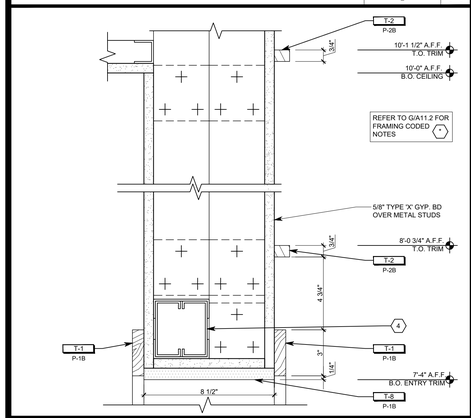

FITTING ROOM TRANSITION DETAIL 3" = 1'-0" - V

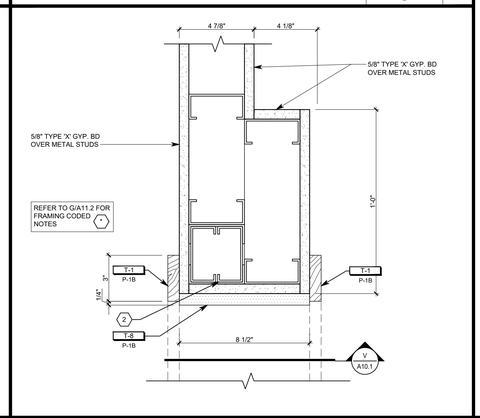

FITTING ROOM TRANSITION DETAIL 3" = 1'-0" - R

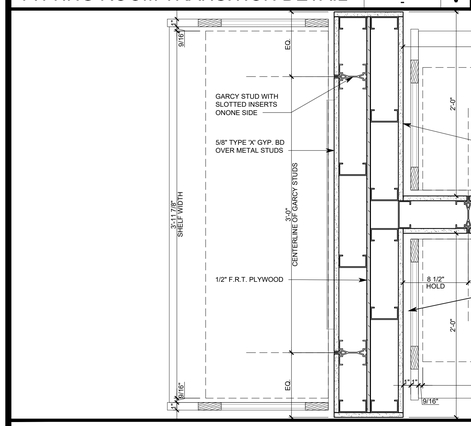

PERIMETER FIXTURE DETAIL (SINGLE BAY) 1 1/2" = 1'-0" - P

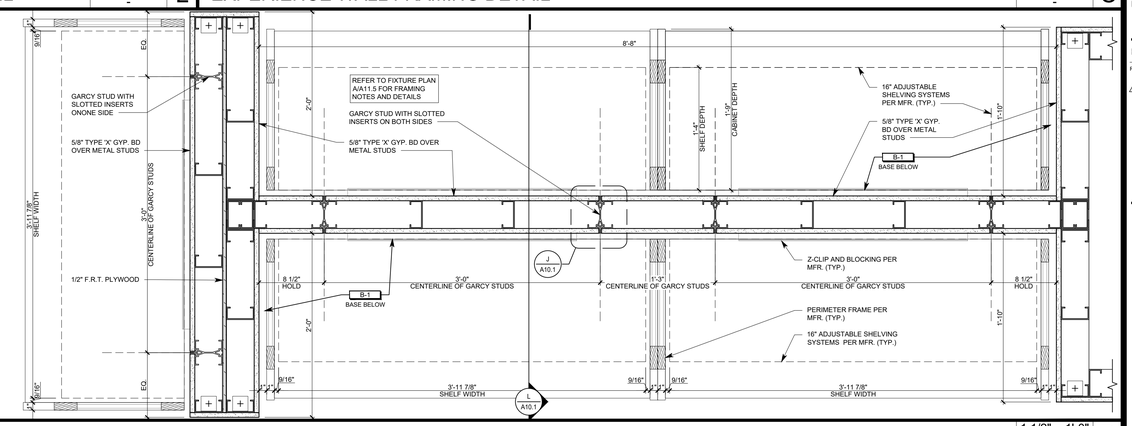

PERIMETER FIXTURE DETAIL (DOUBLE BAY) 1 1/2" = 1'-0" - B

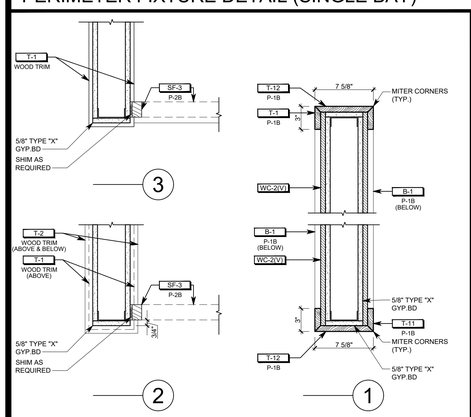

HERITAGE ARCH DETAILS T

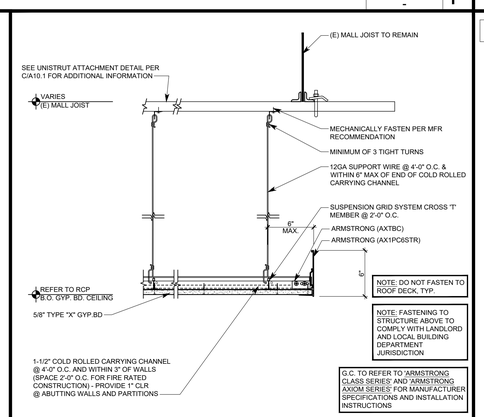

CEILING DETAIL 1 1/2" = 1'-0" - N

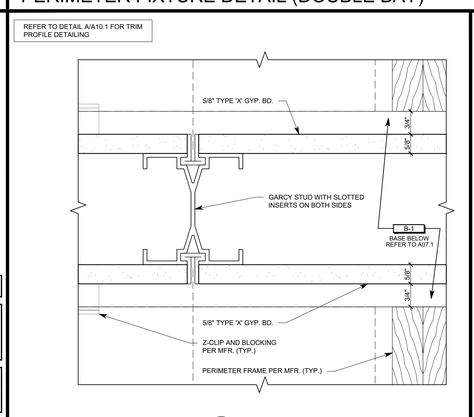

WALL STD ATTACHMENT DETAIL 6" = 1'-0" - J

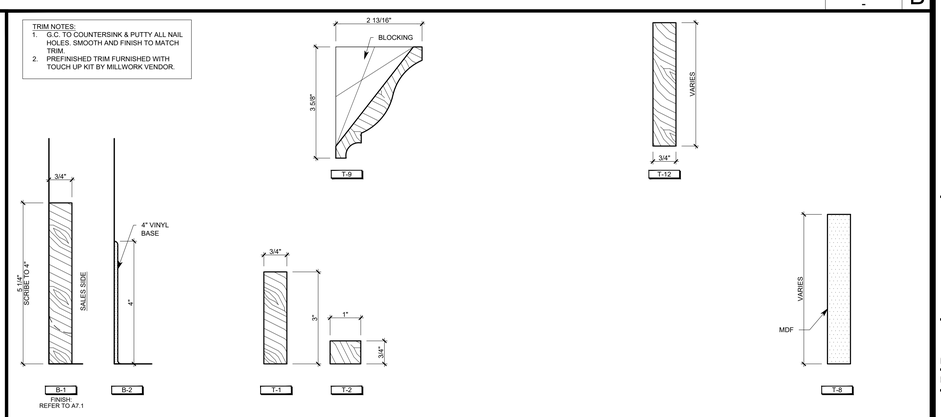

TRIM PROFILES 6" = 1'-0" - A

OWNER:

5A LANDS' END LANE
DODGEVILLE, WI 53595

ARCHITECT / ENGINEER:

SHREMSHOCK
Shremshock Architects, Inc.
7400 W. Campus Rd. Suite 150 New Albany, OH 43054
t: 614 545-4550 | f: 614 545-4555 | shremshock.com
Gerald S. Shremshock, Architect
Timothy J. Shremshock, Architect

©2019 THE ARCHITECT / ENGINEER ASSUMES NO RESPONSIBILITY FOR USE OF PART OF THESE PLANS FOR ANY PROJECT OTHER THAN SPECIFICALLY AUTHORIZED BY THEM AND SIGNED AND SEALED FOR SUCH SPECIFIC LOCATION IN THE STATE, PROVINCE OR TERRITORY SHOWN ON THE SEAL. THIS BUILDING USE IS ONLY APPLICABLE IN AREAS MEETING THE STATED DESIGN CRITERIA.

LANDS' END

STORE NO:
TBD

PROJECT LOCATION:
CONGRESSIONAL PLAZA
1667 ROCKVILLE PIKE
SPACE #06
ROCKVILLE, MD 20852

DESIGN TYPE:
-

REVISIONS:

REQUIRED BY:		DATE
1	CLIENT, LANDLORD & B.D. COMMENTS	07/19/2019

* INDICATES NO REVISION TO THIS SHEET

Professional Certification

I certify that these documents were prepared or approved by me, and that I am a duly licensed architect under the laws of the State of Maryland license number 17246, expiration date February 28, 2021.

DETAILS

DRAWN BY: JAW CHECKED BY: BRW/ELM/RHW

DATE ISSUED: 06/07/2019
PROJECT NO: 190148

DRAWING NO:
A10.1

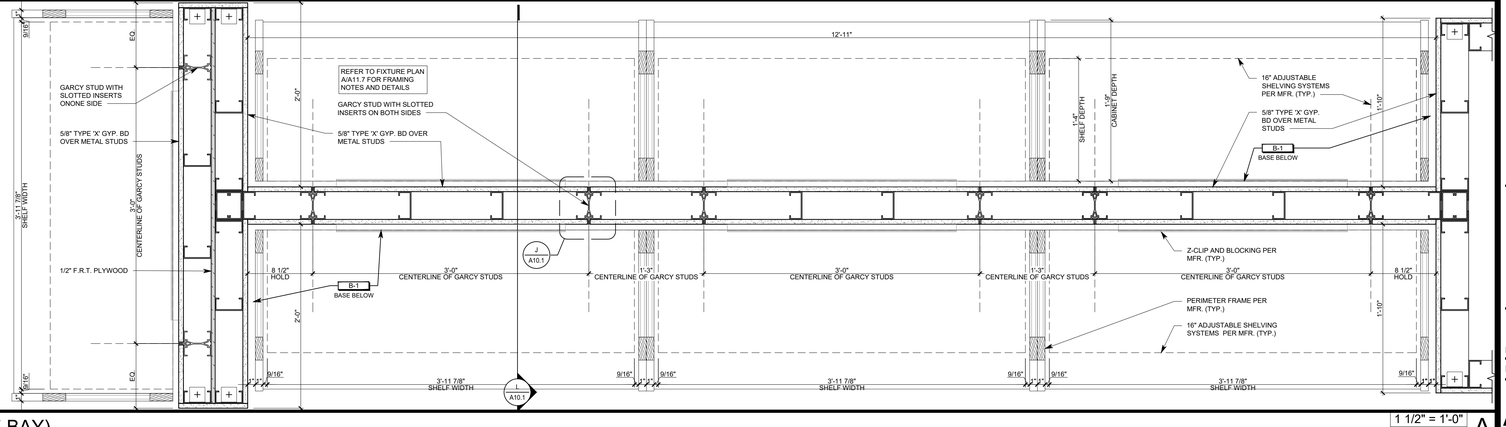

PERIMETER FIXTURE DETAIL (TRIPLE BAY)

1 1/2" = 1'-0"

-

A

OWNER:

5A LANDS' END LANE
DODGEVILLE, WI 53595

ARCHITECT / ENGINEER:

SHREMSHOCK
Shremshock Architects, Inc.
7400 W. Campus Rd. Suite 150 New Albany, OH 43054
t: 614 545-4550 | f: 614 545-4555 | shremshock.com
Gerald S. Shremshock, Architect
Timothy J. Shremshock, Architect

©2019 THE ARCHITECT / ENGINEER ASSUMES NO RESPONSIBILITY FOR THE USE OF THESE PLANS THESE PLANS FOR ANY PROJECT OTHER THAN SPECIFICALLY AUTHORIZED BY THEM AND SIGNED AND SEALED FOR SUCH SPECIFIC LOCATION IN THE STATE, PROVINCE OR TERRITORY SHOWN ON THE SEAL. THIS BUILDING USE IS ONLY APPLICABLE IN AREAS MEETING THE STATED DESIGN CRITERIA.

LANDS' END

STORE NO:
TBD

PROJECT LOCATION:
CONGRESSIONAL PLAZA
1667 ROCKVILLE PIKE
SPACE #06
ROCKVILLE, MD 20852

DESIGN TYPE:
-

REVISIONS:

REQUIRED BY:		DATE
1	CLIENT, LANDLORD & B.D. COMMENTS	07/19/2019

* INDICATES NO REVISION TO THIS SHEET

Professional Certification

I certify that these documents were prepared or approved by me, and that I am a duly licensed architect under the laws of the State of Maryland license number 17246, expiration date February 28, 2021 .

DETAILS

DRAWN BY: JAW CHECKED BY: BRW/EL/MR/HW

DATE ISSUED: 06/07/2019

PROJECT NO: 190148

DRAWING NO:
A10.1a

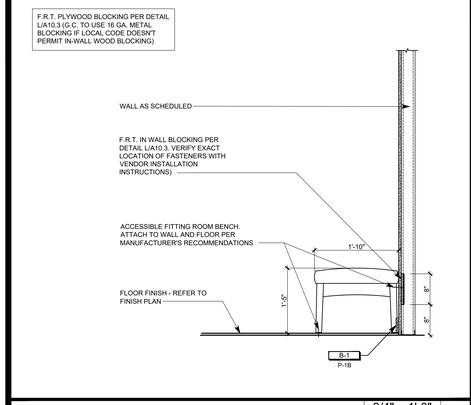

ACCESSIBLE BENCH DETAIL — 3/4" = 1'-0" — W

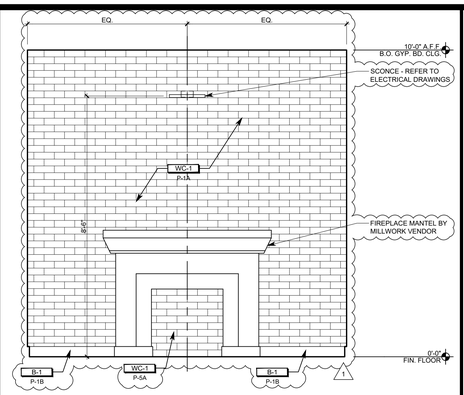

FITTING ROOM LOUNGE ELEVATION — S

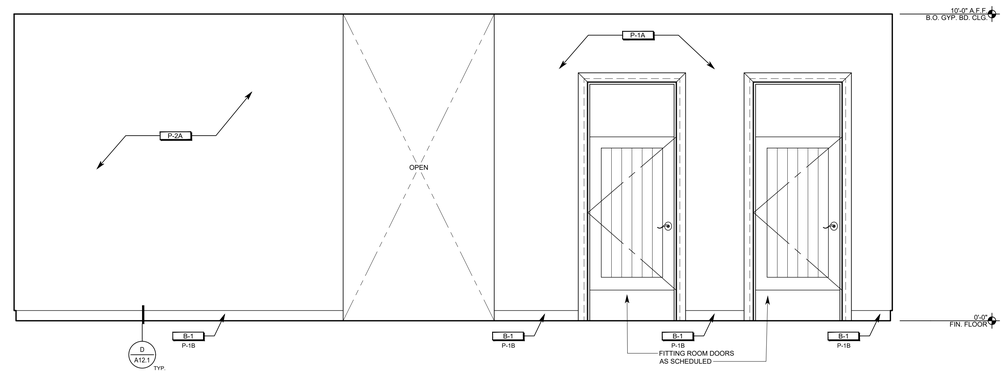

FITTING ROOM LOUNGE ELEVATION — 1/2" = 1'-0" — D

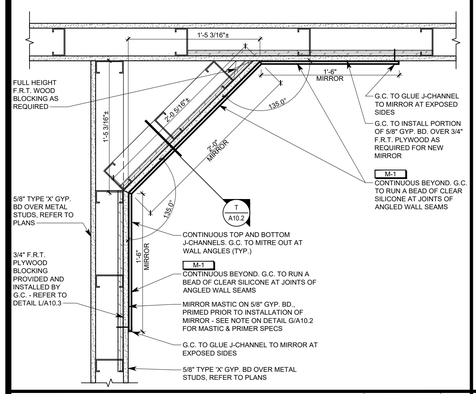

3-WAY MIRROR DETAIL — 1 1/2" = 1'-0" — V

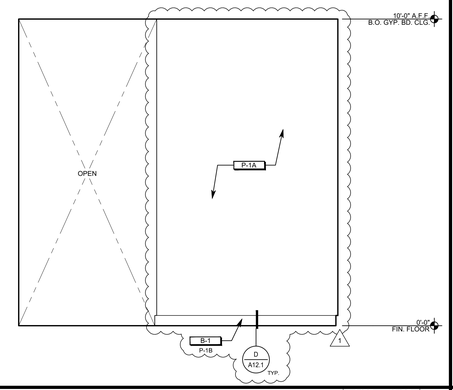

FITTING ROOM LOUNGE ELEVATION — 1/2" = 1'-0" — R

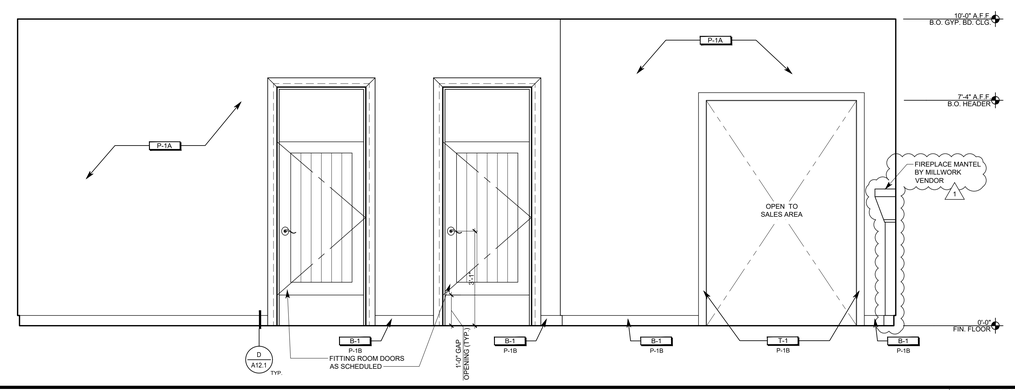

FITTING ROOM LOUNGE ELEVATION — 1/2" = 1'-0" — C

G.C. SUPPLIED MIRROR TO HAVE ADHESIVE BACKED SAFETY FILM ADHERED TO THE BACK TO AVOID FRACTURE ON IMPACT. APPLY ACCORDING TO MANUFACTURERS RECOMMENDED SPECIFICATIONS

MIRROR MASTIC SPEC: PALMER "QWIKSET MIRRO-MASTIC"; PALMER PRODUCTS CORP.

REFER TO P/A10.2 FOR INSTALLATION DETAILS

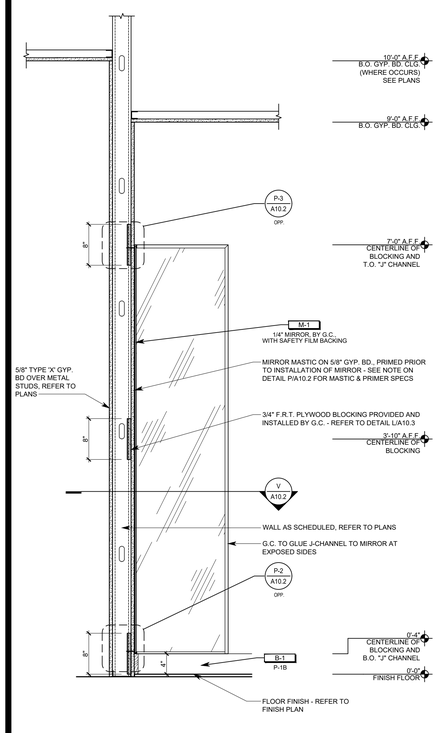

3-WAY MIRROR DETAIL — 1" = 1'-0" — T

DRYWALL AND PLYWOOD PRIMER: KILLZ ORIGINAL (OIL BASED PRIMER); MASTERCHEM INDUSTRIES, INC. (866)774-6371 OR APPROVED EQUAL.

MIRROR MASTIC SPEC PALMER "QWIKSET MIRRO-MASTIC"; PALMER PRODUCTS CORP. (502) 893-3668 OR (800) 431-6151 / FAX (502) 895-9253

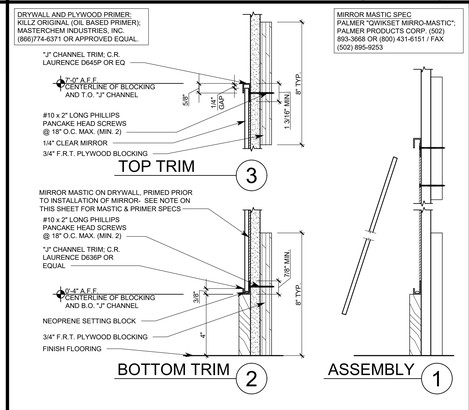

MIRROR INSTALLATION DETAIL — 3" = 1'-0" — P

1. SEE FINISH SCHEDULE ON SHEET G1.3 FOR ALL FINISH INFORMATION.
2. G.C. TO ENSURE ADEQUATE F.R.T. IN WALL BLOCKING FOR ALL WALL MOUNTED ITEMS.
3. G.C. TO APPLY A SMALL BEAD OF PAINTABLE WHITE ACRYLIC CAULK TO THE PERIMETER OF MIRROR (WHERE EDGE MEETS WALL) AND AT ALL LOCATIONS WHERE SEAMS EXIST INSIDE OF THE FITTING ROOMS. WIPE OFF ANY EXCESS CAULK IMMEDIATELY AFTER INSTALLATION (THIS IS TO ENSURE THE PREVENTION OF HIDING PRICE/SECURITY TAGS IN CONCEALED SPACES) - TYPICAL FOR ALL FITTING ROOMS.
4. DOOR FRAMES, STOPS AND TRIM TO BE TIGHT TO FINISH FLOOR. NO GAPS, CAULK OR FILL ACCEPTABLE.

GENERAL NOTES — N

REFER TO FITTING ROOM ELEVATIONS FOR BLOCKING AND HARDWARE MOUNTING HEIGHTS

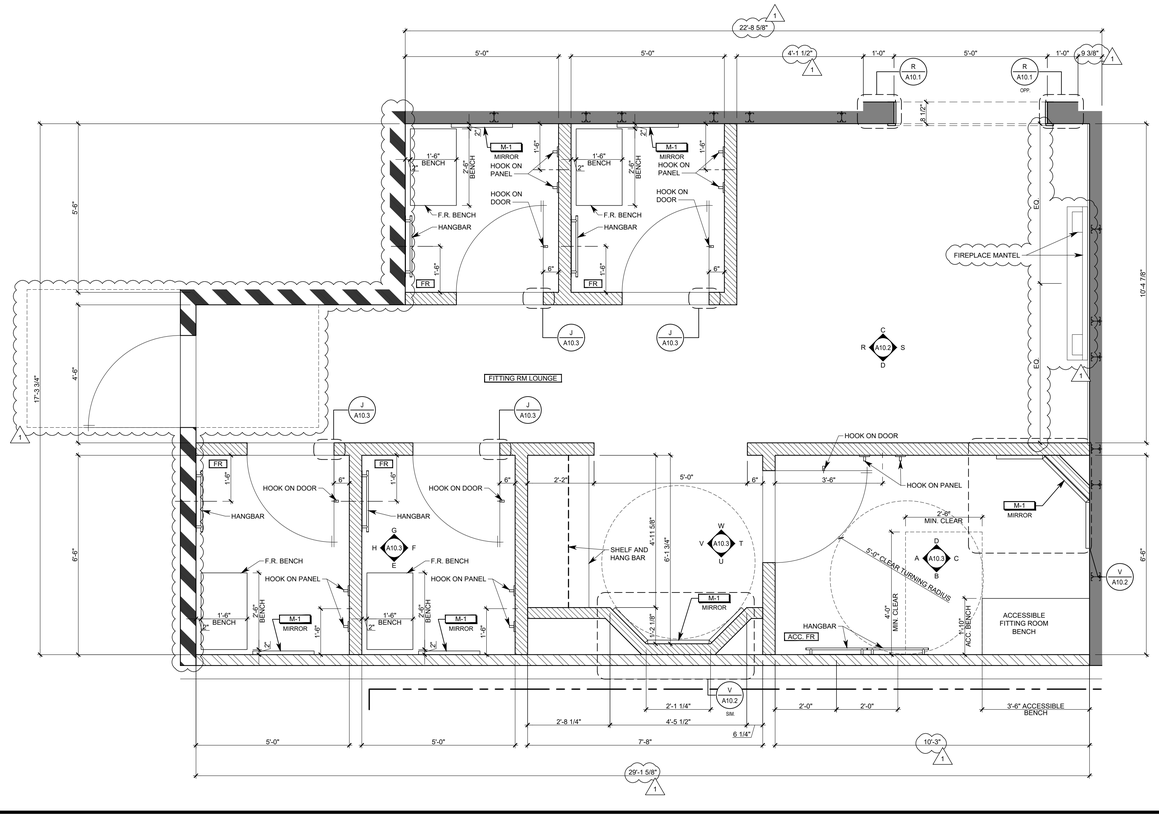

ENLARGED FITTING ROOM PLAN — 1/2" = 1'-0" — A

OWNER:

5A LANDS' END LANE
DODGEVILLE, WI 53595

ARCHITECT / ENGINEER:

SHREMSHOCK
Shremshock Architects, Inc.
7400 W. Campus Rd. Suite 150 New Albany, OH 43054
t: 614 545-4555 | shremshock.com
Gerald S. Shremshock, Architect
Timothy J. Shremshock, Architect

©2019 THE ARCHITECT / ENGINEER ASSUMES NO RESPONSIBILITY FOR THE USE OF THESE PLANS OR ANY PROJECT OTHER THAN SPECIFICALLY AUTHORIZED BY THEM AND SIGNED AND SEALED FOR SUCH SPECIFIC LOCATION IN THE STATE, PROVINCE OR TERRITORY SHOWN ON THE SEAL. THIS BUILDING USE IS ONLY APPLICABLE IN AREAS MEETING THE STATED DESIGN CRITERA.

LANDS' END

STORE NO:
TBD

PROJECT LOCATION:
CONGRESSIONAL PLAZA
1667 ROCKVILLE PIKE
SPACE #06
ROCKVILLE, MD 20852

DESIGN TYPE:
-

REVISIONS:

REQUIRED BY:		DATE
1	CLT CLIENT, LANDLORD & B.O. COMMENTS	07/19/2019

* INDICATES NO REVISION TO THIS SHEET

Professional Certification

I certify that these documents were prepared or approved by me, and that I am a duly licensed architect under the laws of the State of Maryland license number 17246, expiration date February 28, 2021.

FITTING ROOM PLAN & ELEVATIONS

DRAWN BY: JH | CHECKED BY: BRW/ELM/RHW

DATE ISSUED: 06/07/2019
PROJECT NO: 190148
DRAWING NO:
A10.2

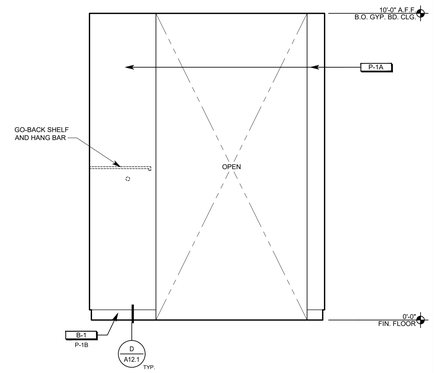

FITTING ROOM LOUNGE ELEVATION | 1/2" = 1'-0" | - | W

NOT USED | S

NOT USED | M

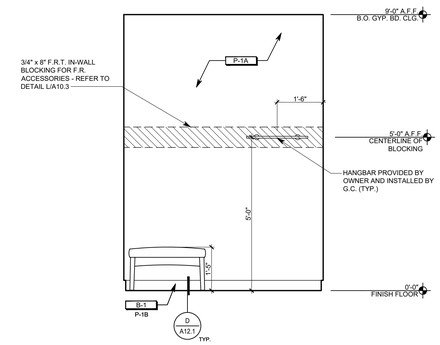

FITTING ROOM ELEVATION | 1/2" = 1'-0" | - | H

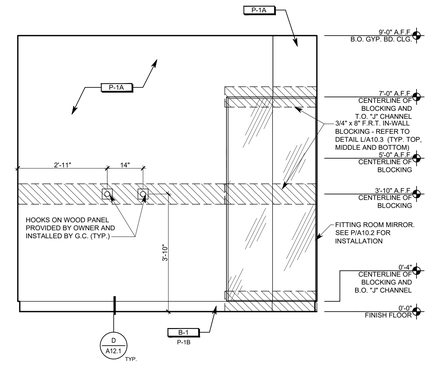

ACCESSIBLE F.R. ELEVATION | 1/2" = 1'-0" | - | D

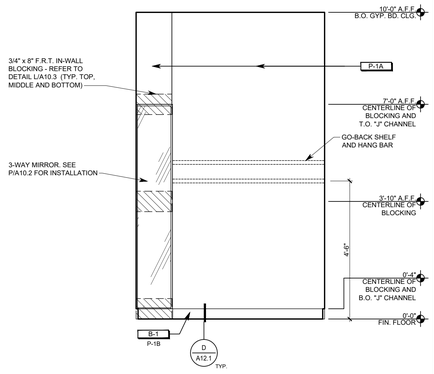

FITTING ROOM LOUNGE ELEVATION | 1/2" = 1'-0" | - | V

NOTE: BACKING PLATES FOR UPPER WALL HUNG CABINETS (UP TO 2 SHELVES) BASE CABINETS, FULL HEIGHT CABINETS, HANDRAILS, GUARDRAILS, GRAB BARS, WALL HUNG EQUIPMENT, ETC. MAXIMUM WEIGHT - 250 LBS./FT.

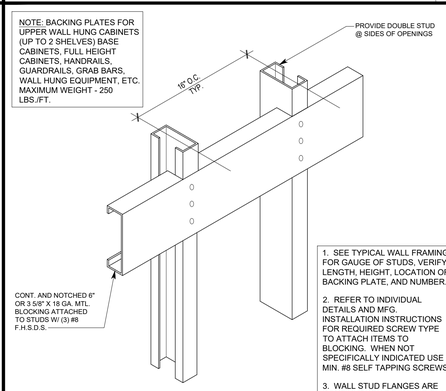

1. SEE TYPICAL WALL FRAMING FOR GAUGE OF STUDS, VERIFY LENGTH, HEIGHT, LOCATION OF BACKING PLATE, AND NUMBER.

2. REFER TO INDIVIDUAL DETAILS AND MFG. INSTALLATION INSTRUCTIONS FOR REQUIRED SCREW TYPE TO ATTACH ITEMS TO BLOCKING. WHEN NOT SPECIFICALLY INDICATED USE MIN. #8 SELF TAPPING SCREWS.

3. WALL STUD FLANGES ARE CONTINUOUS AT BACKING PLATE.

IN-WALL BLOCKING DETAIL | N.T.S. | - | R

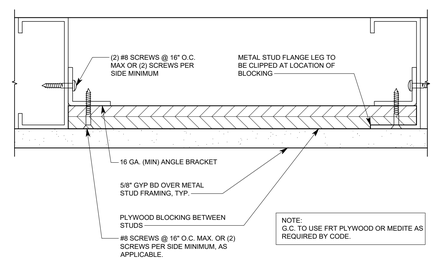

NOTE:
G.C. TO USE FRT PLYWOOD OR MEDITE AS REQUIRED BY CODE.

IN-WALL BLOCKING DETAIL | 6" = 1'-0" | - | L

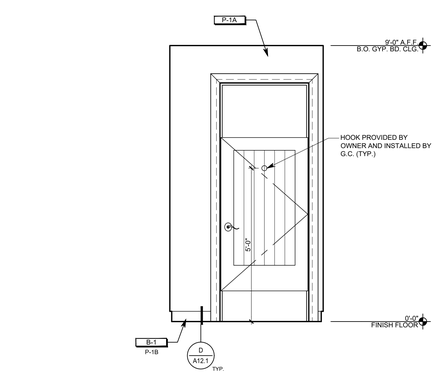

FITTING ROOM ELEVATION | 1/2" = 1'-0" | - | G

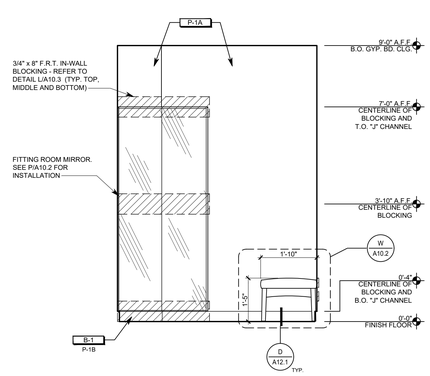

ACCESSIBLE F.R. ELEVATION | 1/2" = 1'-0" | - | C

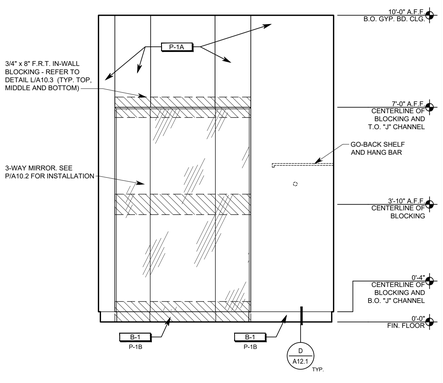

FITTING ROOM LOUNGE ELEVATION | 1/2" = 1'-0" | - | U

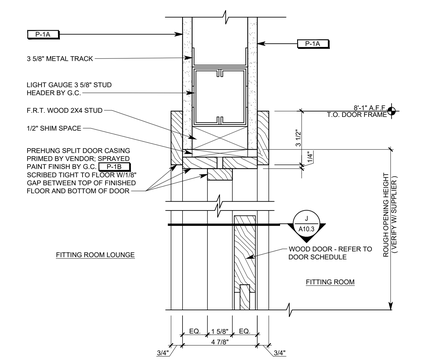

FITTING ROOM DOOR HEAD DETAIL | 3" = 1'-0" | - | K

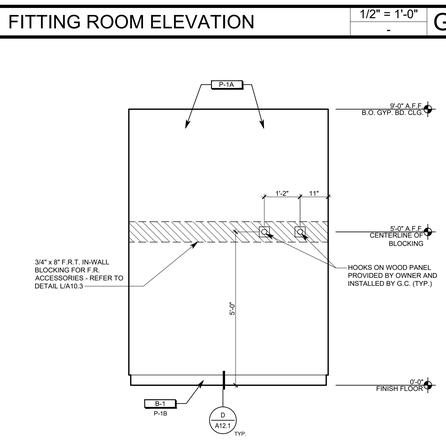

FITTING ROOM ELEVATION | 1/2" = 1'-0" | - | F

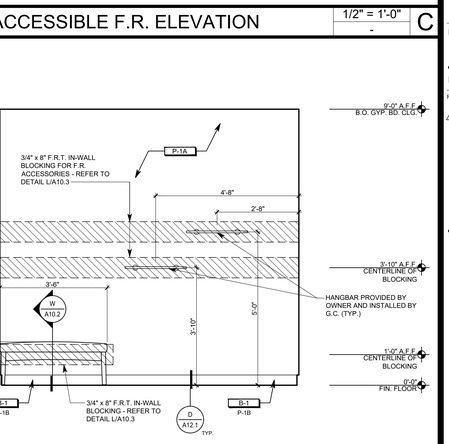

ACCESSIBLE F.R. ELEVATION | 1/2" = 1'-0" | - | B

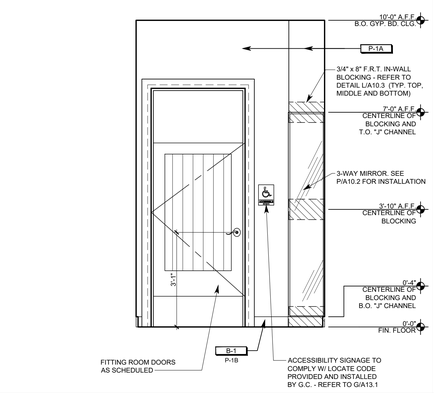

FITTING ROOM LOUNGE ELEVATION | 1/2" = 1'-0" | - | T

NOT USED | N

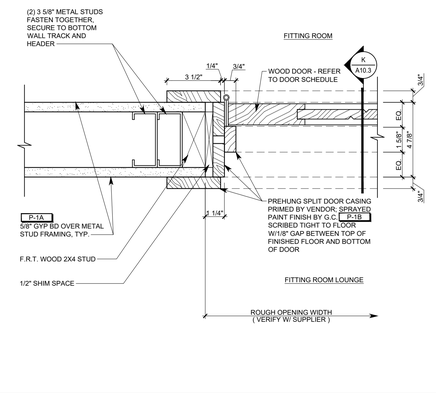

FITTING ROOM DOOR JAMB DETAIL | 3" = 1'-0" | - | J

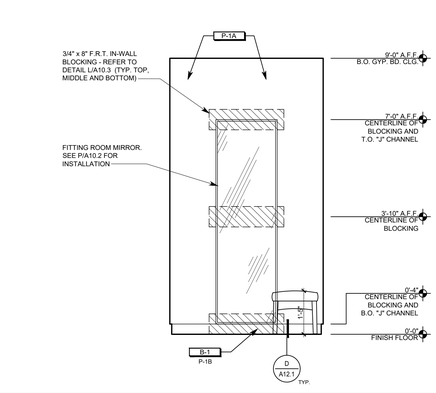

FITTING ROOM ELEVATION | 1/2" = 1'-0" | - | E

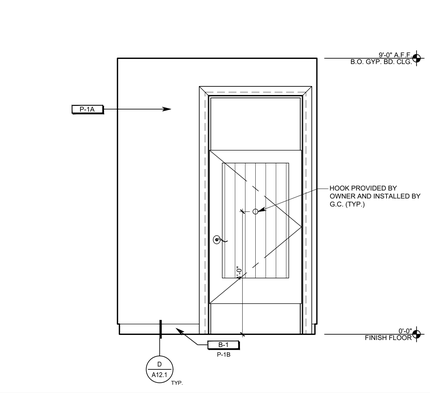

ACCESSIBLE F.R. ELEVATION | 1/2" = 1'-0" | - | A

OWNER:

5A LANDS' END LANE
DODGEVILLE, WI 53595

ARCHITECT / ENGINEER:

SHREMSHOCK
Shremshock Architects, Inc.
7400 W. Campus Rd. Suite 150 New Albany, OH 43054
t: 614 545-4555 | shremshock.com
Gerald S. Shremshock, Architect
Timothy J. Shremshock, Architect

©2019 THE ARCHITECT / ENGINEER ASSUMES NO RESPONSIBILITY FOR THE USE OF THESE PLANS FOR ANY PROJECT OTHER THAN SPECIFICALLY AUTHORIZED BY THEM AND SIGNED AND SEALED FOR SUCH SPECIFIC LOCATION IN THE STATE, PROVINCE OR TERRITORY SHOWN ON THE SEAL. THIS BUILDING USE IS ONLY APPLICABLE IN AREAS MEETING THE STATED DESIGN CRITERIA.

LANDS' END

STORE NO:
TBD

PROJECT LOCATION:
CONGRESSIONAL PLAZA
1667 ROCKVILLE PIKE
SPACE #06
ROCKVILLE, MD 20852

DESIGN TYPE:
-

REVISIONS:

REQUIRED BY:		DATE
1	CLIENT, LANDLORD & B.O. COMMENTS	07/19/2019

* INDICATES NO REVISION TO THIS SHEET

Professional Certification

I certify that these documents were prepared or approved by me, and that I am a duly licensed architect under the laws of the State of Maryland license number 17246, expiration date February 28, 2021.

FITTING ROOM ELEVATIONS & DETAILS

DRAWN BY: JH | CHECKED BY: BRW/ELM/RHW

DATE ISSUED: 06/07/2019
PROJECT NO: 190148
DRAWING NO:
A10.3

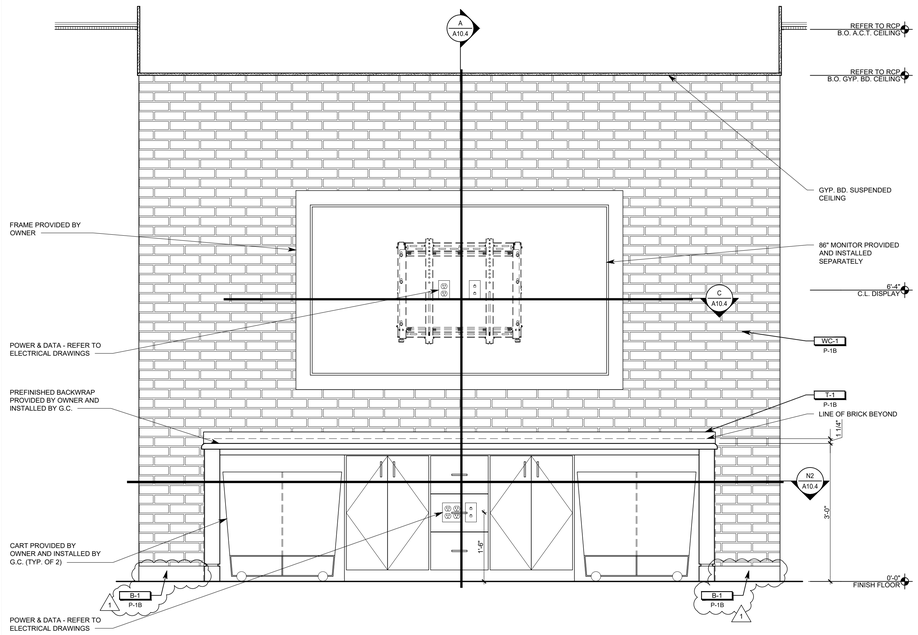

BACKWRAP ELEVATION

3/4" = 1'-0" | R

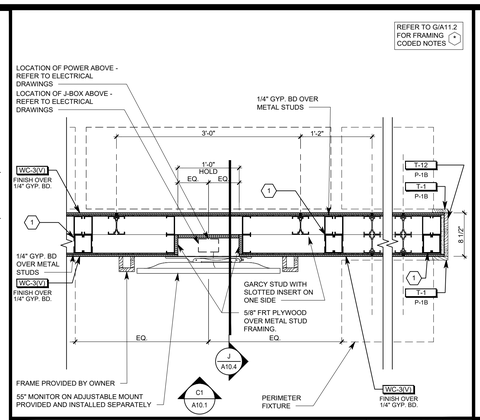

MONITOR AT DISPLAY WALL

1" = 1'-0" | M

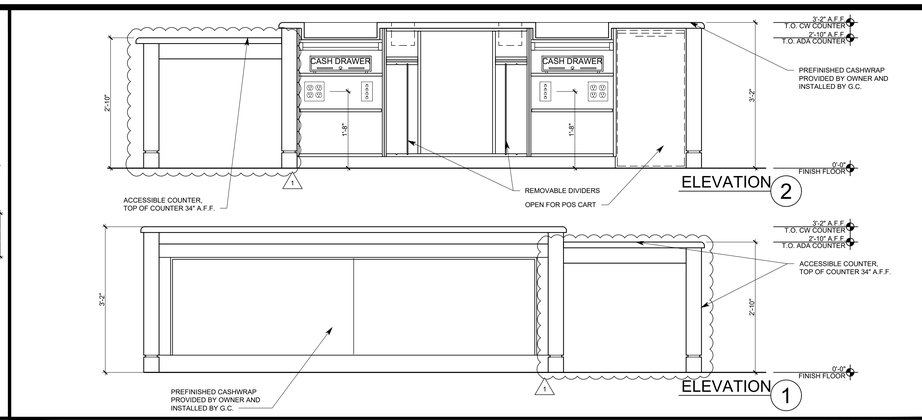

CASHWRAP ELEVATION

3/4" = 1'-0" | D

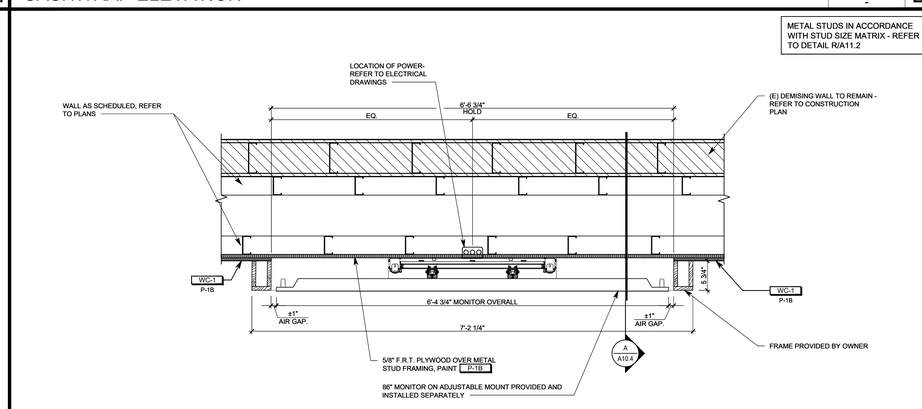

MONITOR PLAN AT BACKWRAP

1" = 1'-0" | C

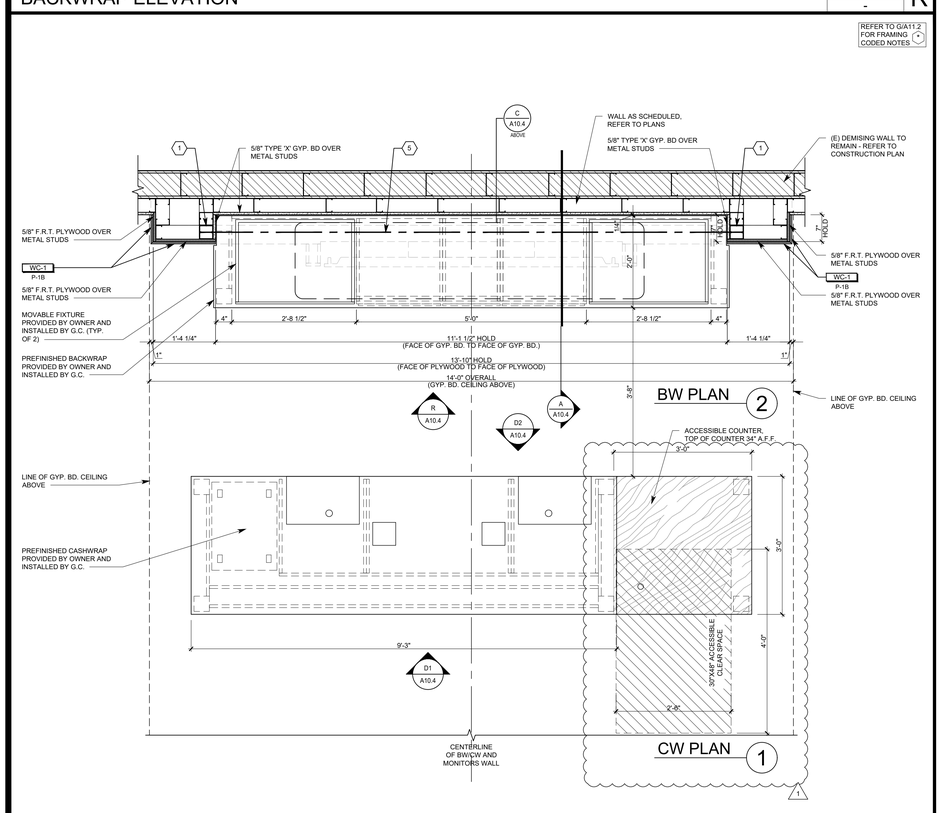

PLAN AT CASHWRAP AND BACKWRAP

3/4" = 1'-0" | N

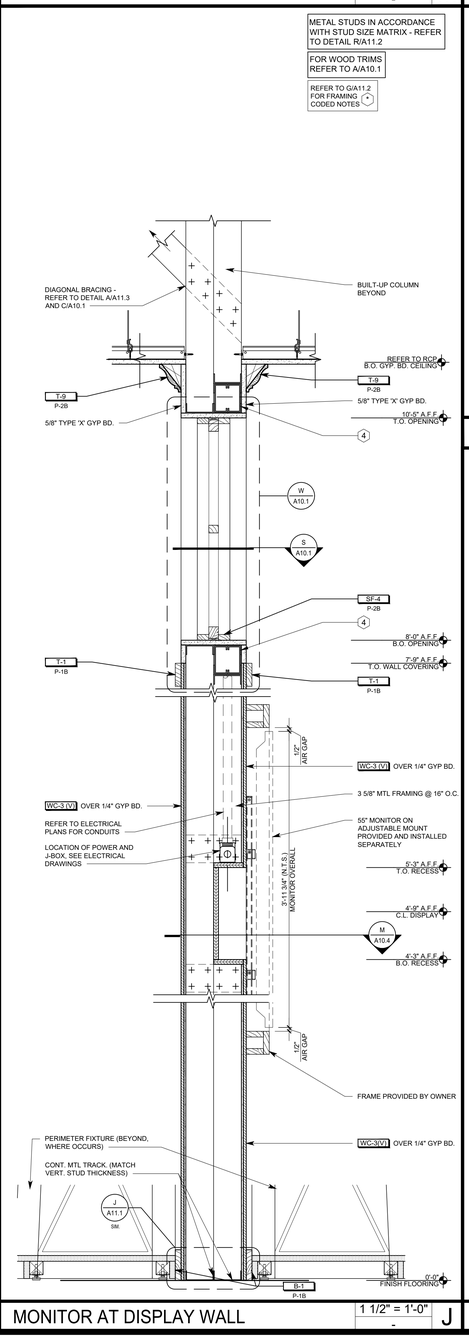

MONITOR AT DISPLAY WALL

1 1/2" = 1'-0" | J

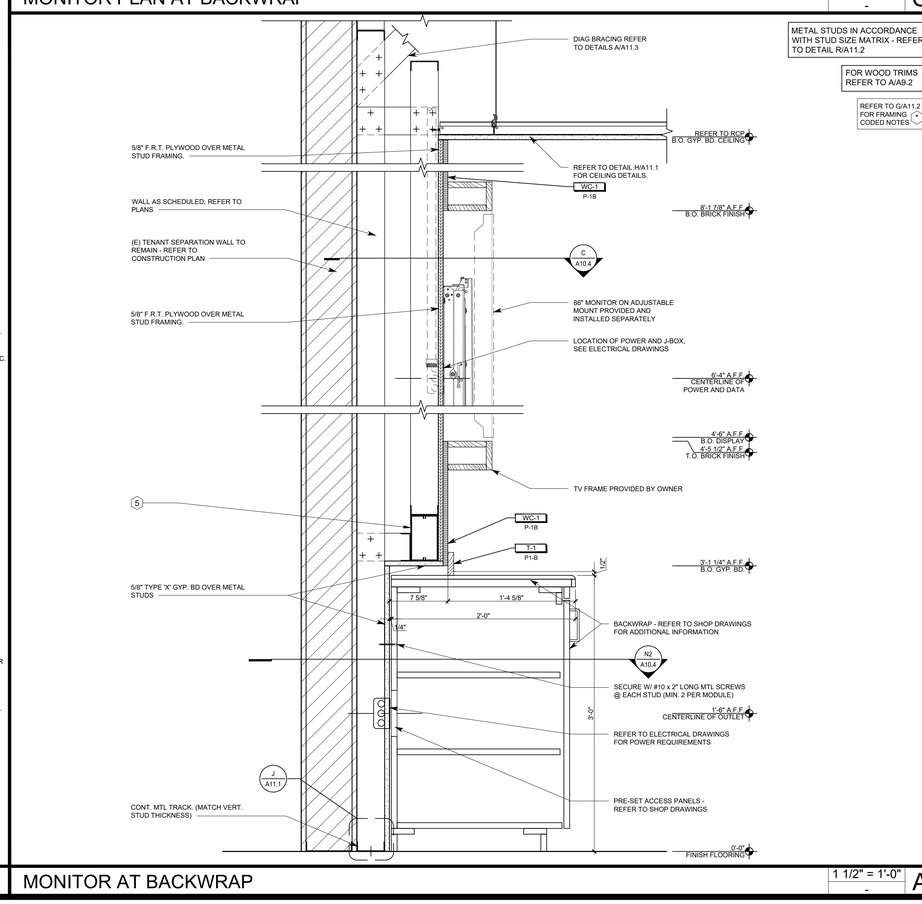

MONITOR AT BACKWRAP

1 1/2" = 1'-0" | A

OWNER:

5A LANDS' END LANE
DODGEVILLE, WI 53595

ARCHITECT / ENGINEER:

SHREMSHOCK
Shremshock Architects, Inc.
7400 W. Campus Rd. Suite 150 New Albany, OH 43054
t: 614 545-4550 | f: 614 545-4555 | shremshock.com
Gerald S. Shremshock, Architect
Timothy J. Shremshock, Architect

©2019 THE ARCHITECT / ENGINEER ASSUMES NO RESPONSIBILITY FOR THE USE OF THESE PLANS OR ANY PROJECT OTHER THAN SPECIFICALLY AUTHORIZED BY THEM AND SIGNED AND SEALED FOR SUCH SPECIFIC LOCATION IN THE STATE, PROVINCE OR TERRITORY SHOWN ON THE SEAL. THIS BUILDING USE IS ONLY APPLICABLE IN AREAS MEETING THE STATED DESIGN CRITERIA.

LANDS' END

STORE NO:
TBD

PROJECT LOCATION:
CONGRESSIONAL PLAZA
1667 ROCKVILLE PIKE
SPACE #06
ROCKVILLE, MD 20852

DESIGN TYPE:
-

REVISIONS:

REQUIRED BY:		DATE
1	BRW CLIENT, LANDLORD & B.O. COMMENTS	07/19/2019

* INDICATES NO REVISION TO THIS SHEET

Professional Certification

I certify that these documents were prepared or approved by me, and that I am a duly licensed architect under the Laws of the State of Maryland license number 17246, expiration date February 28, 2021.

DETAILS

DRAWN BY: JAW | CHECKED BY: BRW/ELM/RHW

DATE ISSUED: 06/07/2019
PROJECT NO: 190148
DRAWING NO:
A10.4

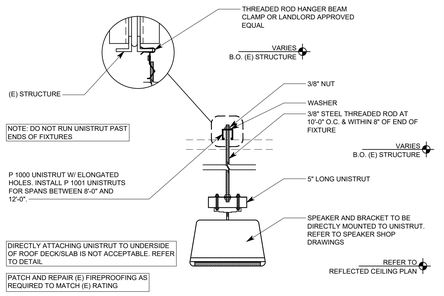

SUSPENDED SPEAKER | 1 1/2" = 1'-0" - | W

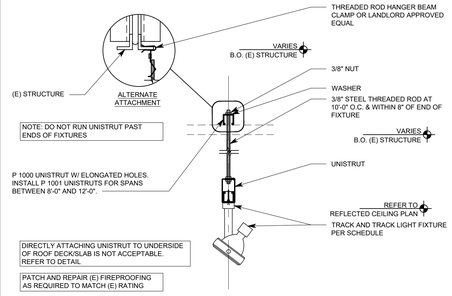

SUSPENDED TRACK FIXTURE | 1 1/2" = 1'-0" - | S

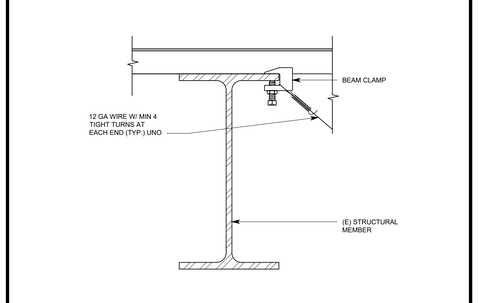

WIRE TIE CONNECTION | 3" = 1'-0" - | M

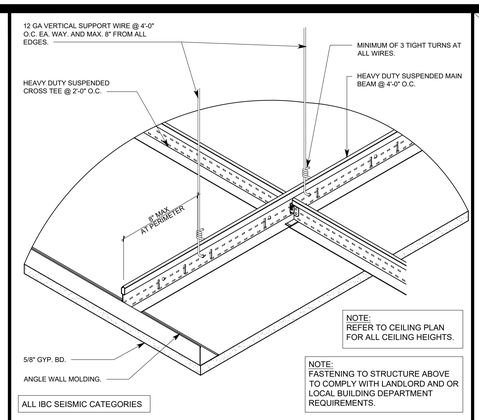

SUSPENDED GYP. BD. CEILING | 3" = 1'-0" - | H

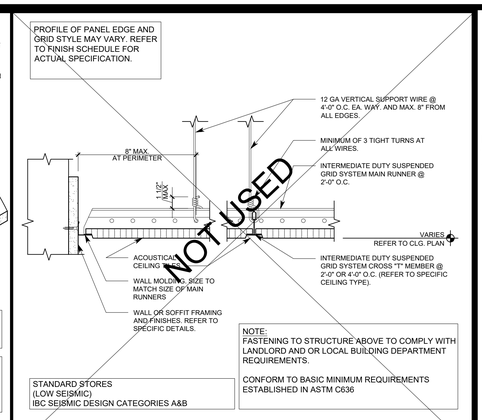

ACOUSTICAL CEILING TILE | 3" = 1'-0" - | D

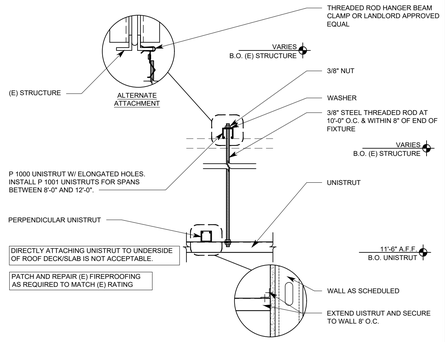

SUSPENDED UNISTRUT | 1 1/2" = 1'-0" - | V

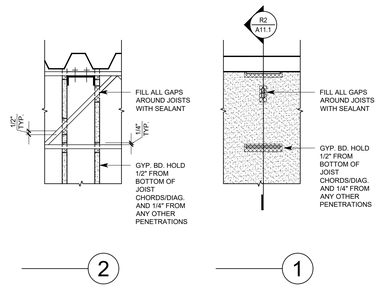

DEFLECTION DETAIL | 1 1/2" = 1'-0" - | R

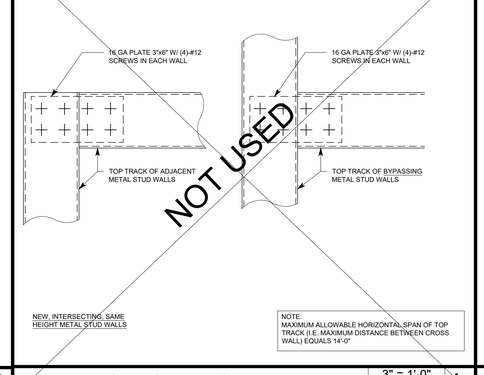

TOP TRACK TO ADJACENT WALL | 3" = 1'-0" - | L

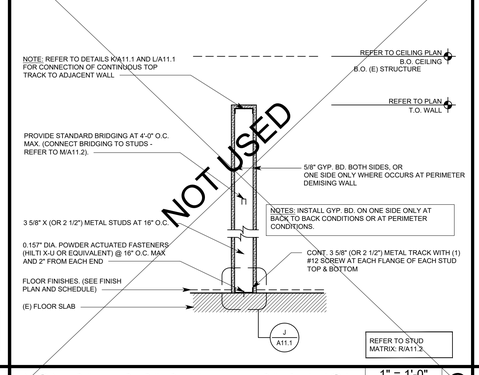

NON-RATED PARTIAL HT. PARTITION | 1" = 1'-0" - | G

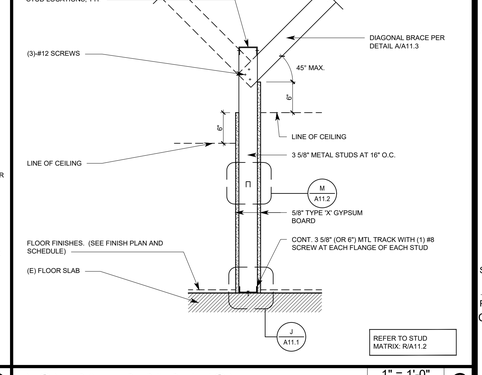

NON-RATED PARTITION | 1" = 1'-0" - | C

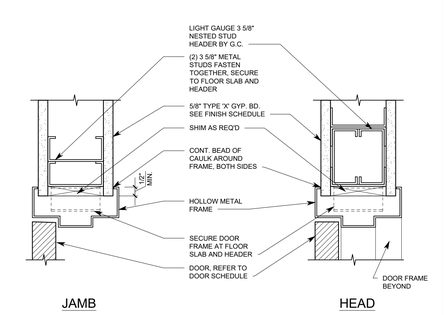

HEAD / JAMB DETAIL | 3" = 1'-0" - | U

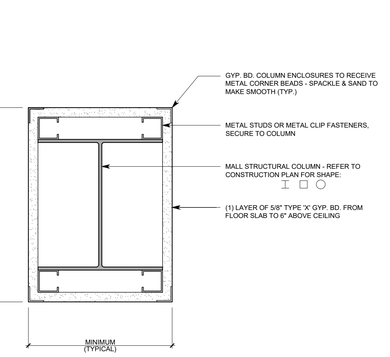

COLUMN ENCLOSURE DETAIL | 3" = 1'-0" - | P

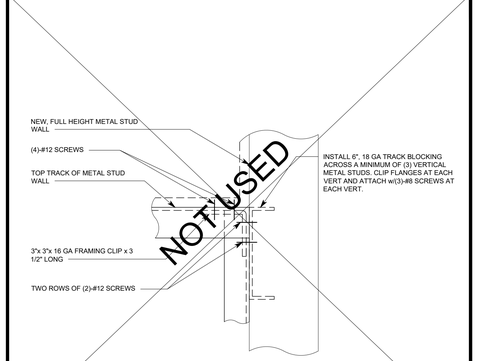

TOP TRACK TO ADJACENT WALL | 3" = 1'-0" - | K

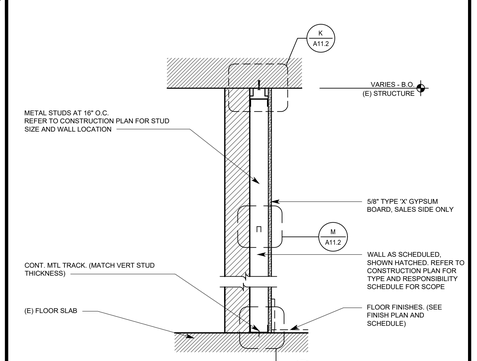

FURRING PARTITION DETAIL | 1" = 1'-0" - | F

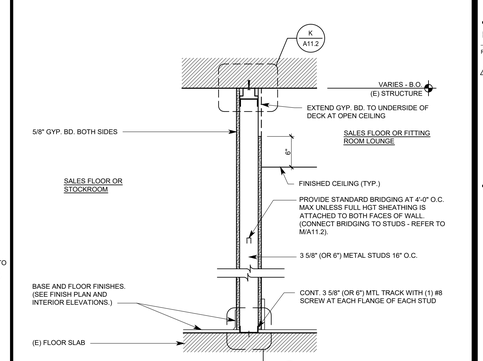

NON-RATED PARTITION (TO STRUCT) | 1" = 1'-0" - | B

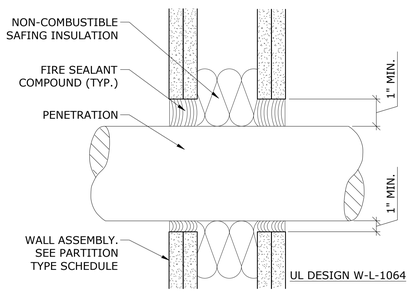

RATED WALL PENETRATION DETAIL | FULL - | T

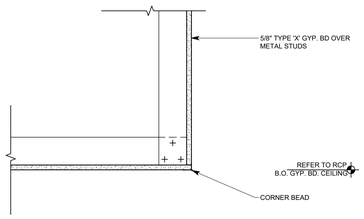

CEILING DETAIL | 1 1/2" = 1'-0" - | N

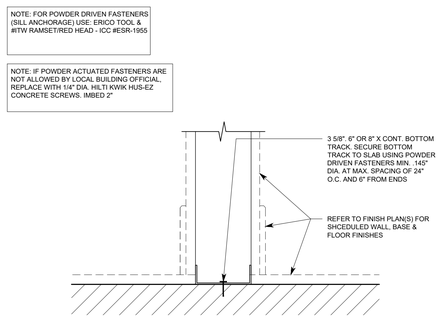

FLOOR CONNECTION DETAIL | 3" = 1'-0" - | J

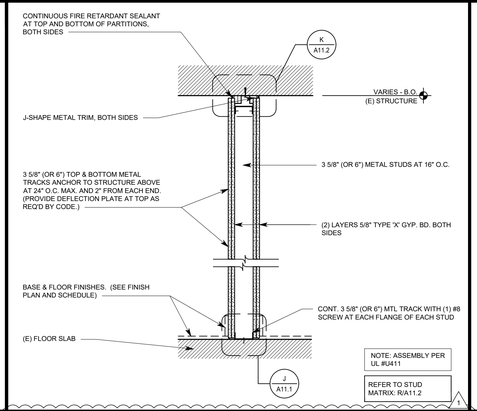

2 HOUR RATED PARTITION (U411) | 1" = 1'-0" - | E

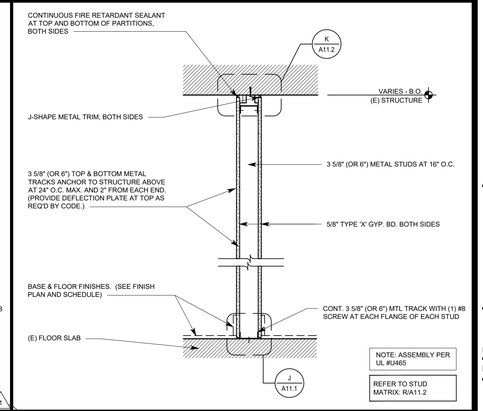

1 HOUR RATED PARTITION (U465) | 1" = 1'-0" - | A

OWNER:

5A LANDS' END LANE
DODGEVILLE, WI 53595

ARCHITECT / ENGINEER:

SHREMSHOCK
Shremshock Architects, Inc.
7400 W. Campus Rd. Suite 150 New Albany, OH 43054
t: 614 545-4550 | f: 614 545-4555 | shremshock.com
Gerald S. Shremshock, Architect
Timothy J. Shremshock, Architect

©2019 THE ARCHITECT / ENGINEER ASSUMES NO RESPONSIBILITY FOR THE USE OF THESE PLANS FOR ANY PROJECT OTHER THAN SPECIFICALLY AUTHORIZED BY THEM AND SIGNED AND SEALED FOR SUCH SPECIFIC LOCATION IN THE STATE, PROVINCE OR TERRITORY SHOWN ON THE SEAL. THIS BUILDING USE IS ONLY APPLICABLE IN AREAS MEETING THE STATED DESIGN CRITERIA.

LANDS' END

STORE NO:
TBD

PROJECT LOCATION:
CONGRESSIONAL PLAZA
1667 ROCKVILLE PIKE
SPACE #06
ROCKVILLE, MD 20852

DESIGN TYPE:
-

REVISIONS:

REQUIRED BY:		DATE
1	CLT CLIENT, LANDLORD & B.D. COMMENTS	07/19/2019

* INDICATES NO REVISION TO THIS SHEET

Professional Certification
I certify that these documents were prepared or approved by me, and that I am a duly licensed professional architect under the laws of the State of Maryland license number 17246, expiration date February 28, 2021.

PARTITION TYPES & DETAILS

DRAWN BY: JAW | CHECKED BY: BRW/EL M/RHW

DATE ISSUED: 06/07/2019
PROJECT NO: 190148
DRAWING NO:
A11.1

LIGHT GAUGE FRAMING - CROSS REFERENCE GUIDE

MIL. THICKNESS - GAUGE NUMBER CROSS REFERENCE

25 GA. ------ 18 MIL	
22 GA. ------ 27 MIL	16 GA. ------ 54 MIL
20 GA. ------ 33 MIL	14 GA. ------ 68 MIL
18 GA. ------ 43 MIL	12 GA. ------ 97 MIL

EXAMPLE CROSS REFERENCE:

3 5/8", 18 GA STRUCTURAL METAL STUD = 362 S 162 - 43 METAL STUD

STUD DEPTH	(S=STUD) (T=TRACK)	FLANGE WIDTH	STUD THICKNESS
=3.625"		=1.625"	=43 MIL (18 GA.)
=3 5/8"		=1 5/8"	

TYPICAL STRUCTURAL STUDS AND TRACKS

FORMER STANDARD DESIGNATION	NEW SSMA DESIGNATION (STEEL STUD MANUFACTURERS ASSOCIATION)
2 1/2", 20 GA. STUD w/ 1 5/8" FLANGE 2 1/2", 18 GA. STUD w/ 1 5/8" FLANGE	250S162-33 250S162-43
3 5/8", 20 GA. STUD w/ 1 5/8" FLANGE 3 5/8", 18 GA. STUD w/ 1 5/8" FLANGE	362S162-33 362S162-43
6", 20 GA. STUD w/ 1 5/8" FLANGE 6", 18 GA. STUD w/ 1 5/8" FLANGE	600S162-33 600S162-43
8", 18 GA. STUD w/ 1 5/8" FLANGE 8", 16 GA. STUD w/ 1 5/8" FLANGE	800S162-43 800S162-54
10", 18 GA. STUD w/ 1 5/8" FLANGE 10", 16 GA. STUD w/ 1 5/8" FLANGE	1000S162-43 1000S162-54
12", 16 GA. STUD w/ 1 5/8" FLANGE 12", 12 GA. STUD w/ 1 5/8" FLANGE	1200S162-54 1200S162-97
1 5/8", 22 GA. TRACK w/ 1 1/4" LEG 1 5/8", 20 GA. TRACK w/ 1 1/4" LEG	162T125-27 162T125-33
2 1/2", 20 GA. TRACK w/ 1 1/4" LEG 2 1/2", 20 GA. TRACK w/ 2" LEG 2 1/2", 18 GA. TRACK w/ 1 1/4" LEG 2 1/2", 18 GA. TRACK w/ 2" LEG	250T125-33 250T200-33 250T125-43 250T200-43
3 5/8", 20 GA. TRACK w/ 1 1/4" LEG 3 5/8", 20 GA. TRACK w/ 2" LEG 3 5/8", 18 GA. TRACK w/ 1 1/4" LEG 3 5/8", 18 GA. TRACK w/ 2" LEG	362T125-33 362T200-33 362T125-43 362T200-43
6", 20 GA. TRACK w/ 1 1/4" LEG 6", 20 GA. TRACK w/ 2" LEG 6", 18 GA. TRACK w/ 1 1/4" LEG 6", 18 GA. TRACK w/ 2" LEG	600T125-33 600T200-33 600T125-43 600T200-43

TYPICAL HAT (FURRING) CHANNELS

7/8", 25 GA. FURRING CHANNEL 7/8", 22 GA. FURRING CHANNEL	087F125-18 087F125-27

LIGHT GAUGE FRAMING SCREW CONNECTIONS

UNLESS NOTED, LIGHT GAUGE FRAMING CONNECTIONS SHALL BE MADE USING #8 SCREWS. SEE DETAIL A/A11.3 FOR DIAGONAL BRACING CONNECTIONS.

AT LOCATIONS WHERE SHEATHING MATERIAL IS PLACED AGAINST THE SCREW HEADS OF LIGHTGAUGE METAL FRAMING CONNECTIONS, PANCAKE HEAD SCREWS SHALL BE USED SO THAT THE SHEATHING MATERIAL REMAINS STRAIGHT AND SMOOTH.

LIMITING HEIGHTS FOR INTERIOR METAL STUD PARTITIONS
SALES PARTITIONS WITHOUT SHELVING ATTACHED
NON-SALES PARTITIONS WITHOUT SHELVING ATTACHED
ALL SEISMIC DESIGN CATEGORIES

STUD DESIGNATION	STUD DEPTH	FLANGE WIDTH	STUD GAUGE	STUD SPACING	MAXIMUM WALL HEIGHT OR MAXIMUM HEIGHT TO DIAGONAL BRACE
362S162-33	3-5/8"	1-5/8"	20	16"	17'-6"
362S162-43	3-5/8"	1-5/8"	18	16"	19'-0"
362S162-54	3-5/8"	1-5/8"	16	16"	20'-6"
600S162-33	6"	1-5/8"	20	16"	26'-6"
600S162-43	6"	1-5/8"	18	16"	28'-6"
600S162-54	6"	1-5/8"	16	16"	30'-0"

LIMITING HEIGHTS FOR INTERIOR METAL STUD PARTITIONS
SALES PARTITIONS WITH SHELVING ATTACHED
SEISMIC DESIGN CATEGORIES A AND B

STUD DESIGNATION	STUD DEPTH	FLANGE WIDTH	STUD GAUGE	STUD SPACING	MAXIMUM WALL HEIGHT OR MAXIMUM HEIGHT TO DIAGONAL BRACE (SEE NOTE 6)
362S162-33	3-5/8"	1-5/8"	20	16"	16'-0"
362S162-43	3-5/8"	1-5/8"	18	16"	18'-0"
362S162-33	3-5/8"	1-5/8"	20	12"	18'-0"
362S162-54	3-5/8"	1-5/8"	16	16"	19'-6"
362S162-43	3-5/8"	1-5/8"	18	12"	20'-0"
600S162-33	6"	1-5/8"	20	12"	25'-0"
600S162-54	6"	1-5/8"	16	16"	26'-6"
600S162-43	6"	1-5/8"	18	12"	27'-0"
600S162-54	6"	1-5/8"	16	12"	29'-0"
DBL 600S162-54 (#8 SCREWS @ 12" O.C.)	6"	1-5/8"	16	16"	31'-0"

LIMITING HEIGHTS FOR INTERIOR METAL STUD PARTITIONS
NON-SALES PARTITIONS WITH SHELVING ATTACHED
SEISMIC DESIGN CATEGORIES A AND B

STUD DESIGNATION	STUD DEPTH	FLANGE WIDTH	STUD GAUGE	STUD SPACING	MAXIMUM HEIGHT TO DIAGONAL BRACE
362S162-33	3-5/8"	1-5/8"	20	16"	15'-0"
362S162-43	3-5/8"	1-5/8"	18	16"	16'-0"
362S162-54	3-5/8"	1-5/8"	16	16"	17'-0"

NOTE: AT LOCATIONS WHERE A STUD WALL SUPPORTS BOTH SALES AND NON-SALES SHELVING, THE STUDS SHOWN IN THE TABLE BELOW SHALL BE "DOUBLED UP" AS FOLLOWS:

IN ADDITION, THE SPACING OF THE TOP AND BOTTOM WALL TRACK CONNECTIONS TO THE EXISTING STRUCTURE SHALL BE REDUCED TO 6" O.C. MAX., AND DIAGONAL SPACING SHALL BE REDUCED TO 32" O.C.

NOTES:

1. DESIGN BASED ON ALLOWABLE DEFLECTION OF L/240.
2. DESIGN BASED ON FY = 33 KSI FOR 3 5/8" & 6" STUDS LESS THAN 16 GAUGE.
   FY = 50 KSI FOR 3 5/8", 16 GAUGE & 6", 16 GAUGE STUDS.
3. PROVIDE HORIZONTAL BRIDGING @ 4'-0" O.C. MAX PER MANUFACTURER'S RECOMMENDATIONS.
4. DESIGN BASED ON MINIMUM 5 PSF LATERAL LOAD, OR LATERAL SEISMIC LOAD, WHICHEVER CONTROLS.
5. TABLE IS VALID FOR (1) LAYER OF GYPSUM BOARD EACH FACE.
6. FOR WALL HEIGHTS GREATER THAN 20'-0", THE TOP OF WALL CANNOT BE BRACED BY A DIAGONAL STUD, BUT MUST BE ATTACHED TO THE STRUCTURE ABOVE WITH A SLIP TRACK.

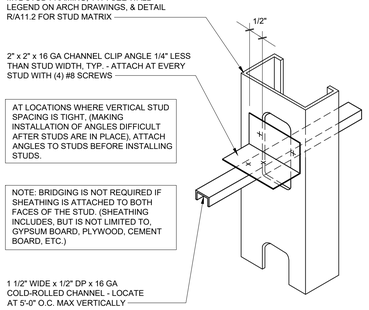

BRIDGING DETAIL — 1" = 1'-0" — M

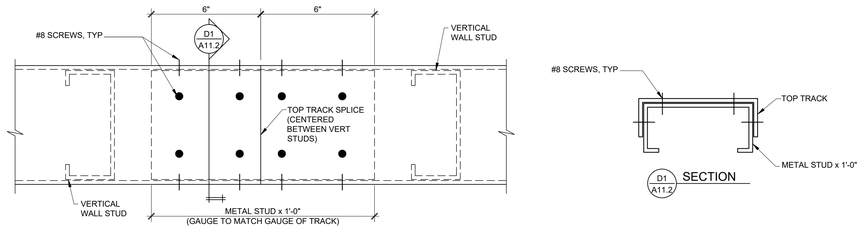

TOP TRACK SPLICE — N.T.S. — D

FRAMING CODED NOTES

1. BUILT-UP BOX COLUMN - DBL 3 5/8" DP, 20 GA STUDS WITH 3-5/8", 20 GA TRACKS, EACH SIDE.
2. BUILT-UP BOX COLUMN - DBL 3 5/8" DP, 20 GA STUDS WITH 3-5/8", 20 GA TRACKS, EACH SIDE.
3. BUILT-UP BOX COLUMN - DBL 6" DP, 20 GA STUDS WITH 6", 20 GA TRACKS, EACH SIDE. SEE E/A11.2 FOR BEAM CONNECTION AND BRACING
4. DBL 3 5/8", 20 GA BEAM WITH 3 5/8", 20 GA TRACK TOP AND BOTTOM
5. DBL 6", 20 GA BEAM WITH 3 5/8", 20 GA TRACK TOP AND BOTTOM
6. DBL 6", 20 GA BEAM WITH 6", 20 GA TRACK TOP AND BOTTOM
7. BUILT-UP BOX COLUMN - DBL 3 5/8" DP, 18 GA STUDS WITH 3-5/8", 18 GA TRACKS, EACH SIDE.
8. DBL 6", 18 GA BEAM WITH 3 5/8", 18 GA TRACK TOP AND BOTTOM
9. 3 5/8" DP, 20 GA STUD WITH 3 5/8", 20 GA TRACK

FRAMING CODED NOTES — N.T.S. — G

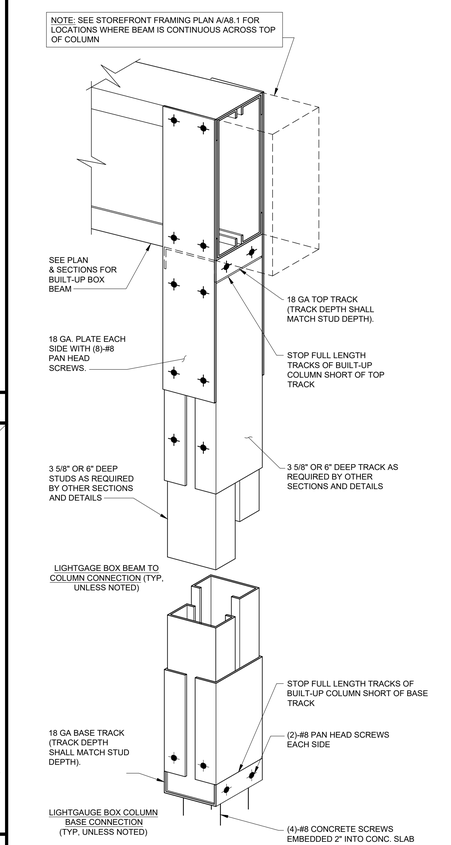

LIGHT GAUGE BOX COLUMN DETAIL — 3" = 1'-0" — A

LIGHT GAUGE METAL FRAMING — N.T.S. — V

SEISMIC DESIGN CATEGORIES A, B, C, D, E & F

PRIOR TO DRILLING HOLES FOR ANCHOR INSTALLATION, CONTRACTOR SHALL LOCATE EXISTING STEEL REINFORCING WITH MAGNETIC METER OR OTHER NONDESTRUCTIVE TEST METHOD. SHIFT CONNECTIONS AS REQUIRED TO MISS REINFORCING.

NOTE: WHEN INSTALLING ANCHORS INTO CONCRETE, ANY DETERIORATED, SPALLING AND/OR DEFECTIVE CONCRETE ENCOUNTERED MUST BE BROUGHT TO THE IMMEDIATE ATTENTION OF THE STRUCTURAL ENGINEER FOR EVALUATION BEFORE CONTINUING WITH INSTALLATION OF THE CONNECTIONS.

NOTE:
BEFORE INSTALLING ANCHORS, CONTRACTOR SHALL VERIFY WITH MALL MANAGEMENT THAT ATTACHMENT SHOWN IS ACCEPTABLE. CONTRACTOR MUST VERIFY WITH MALL MANAGEMENT THE ALLOWABLE DEPTH OF SCREW PENETRATION.

NOT USED

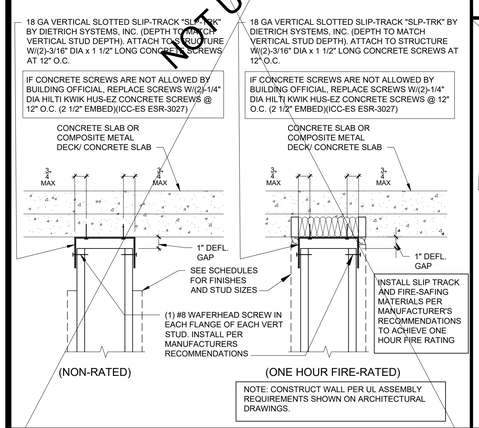

DEFLECTION TRACK FOR ALL SEISMIC DESIGN CATEGORIES — 3" = 1'-0" — T

STUD SIZE MATRIX SEISMIC DESIGN CATEGORIES A & B — N.T.S. — R

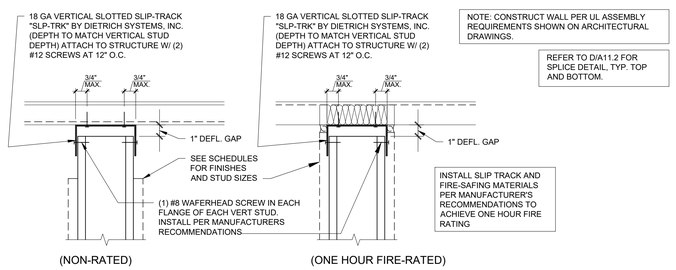

SEISMIC DESIGN CATEGORIES A, B, C, D, E & F

DEFLECTION TRACK- WALL ATTACHMENT TO EXISTING METAL DECK FOR ALL SEISMIC DESIGN CATEGORIES — 3" = 1'-0" — K

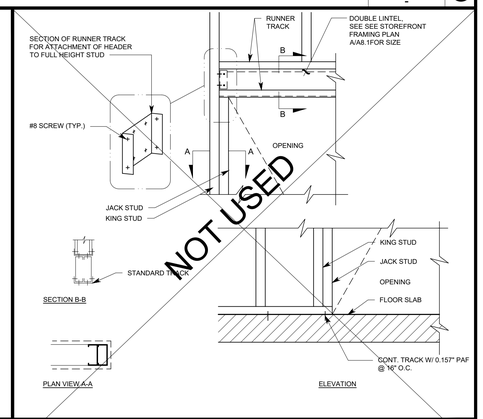

NOT USED

JACK AND KING STUD DETAIL — 3" = 1'-0" — F

NOT USED

SEISMIC DESIGN CATEGORIES A, B, C, D, E & F

DEFLECTION TRACK FOR ALL SEISMIC DESIGN CATEGORIES — 3" = 1'-0" — N

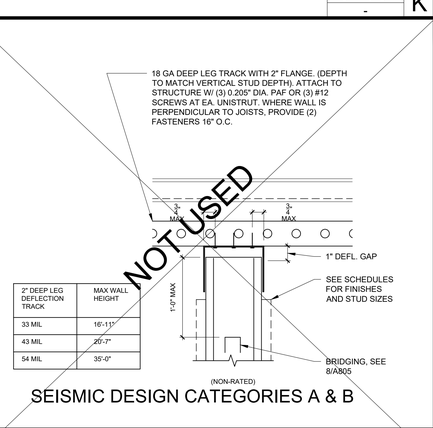

2" DEEP LEG DEFLECTION TRACK	MAX WALL HEIGHT
33 MIL	16'-11"
43 MIL	20'-7"
54 MIL	35'-0"

NOT USED

SEISMIC DESIGN CATEGORIES A & B

NON-DESTRUCTIVE DEFLECTION TRACK SEISMIC DESIGN CATEGORIES A & B — 3" = 1'-0" — J

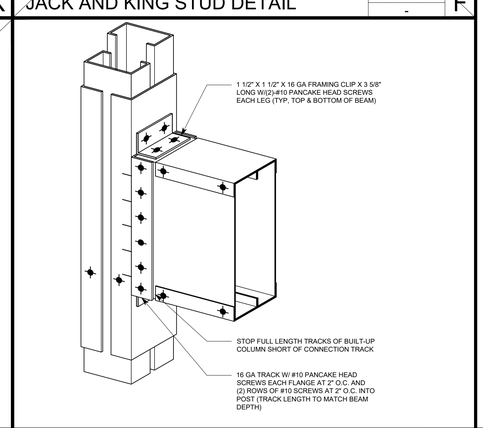

LIGHT GAUGE BOX COLUMN DETAIL — 3" = 1'-0" — E

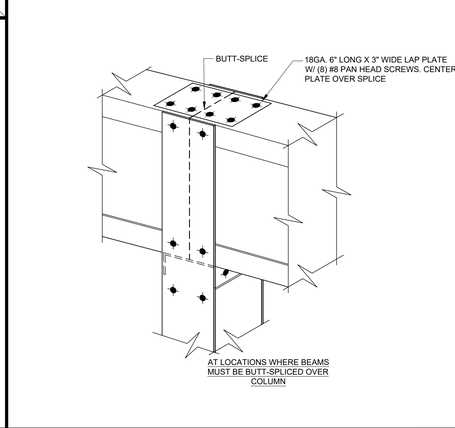

LIGHT GAUGE BOX COLUMN DETAIL — 3" = 1'-0" — A

OWNER:

5A LANDS' END LANE
DODGEVILLE, WI 53595

ARCHITECT / ENGINEER:

SHREMSHOCK
Shremshock Architects, Inc.
7400 W. Campus Rd. Suite 150 New Albany, OH 43054
t: 614 545-4550 | f: 614 545-4555 | shremshock.com
Gerald S. Shremshock, Architect
Timothy J. Shremshock, Architect

©2019 THE ARCHITECT / ENGINEER ASSUMES NO RESPONSIBILITY FOR THE USE OF THESE PLANS FOR ANY PROJECT OTHER THAN SPECIFICALLY AUTHORIZED BY THEM AND SIGNED AND SEALED FOR SUCH SPECIFIC LOCATION IN THE STATE, PROVINCE OR TERRITORY SHOWN ON THE SEAL. THIS BUILDING USE IS ONLY APPLICABLE IN AREAS MEETING THE STATED DESIGN CRITERIA.

LANDS' END

STORE NO: TBD

PROJECT LOCATION:
CONGRESSIONAL PLAZA
1667 ROCKVILLE PIKE
SPACE #06
ROCKVILLE, MD 20852

DESIGN TYPE: -

REVISIONS:

REQUIRED BY:		DATE
1	CLIENT, LANDLORD & B.D. COMMENTS	07/19/2019

* INDICATES NO REVISION TO THIS SHEET

Professional Certification
I certify that these documents were prepared or approved by me, and that I am a duly licensed architect under the laws of the State of Maryland license number 17246, expiration date February 28, 2021.

TYPICAL FRAMING DETAILS

DRAWN BY: JAW CHECKED BY: BRW/ELM/RHW

DATE ISSUED: 06/07/2019
PROJECT NO: 190148
DRAWING NO: A11.2

PRIOR TO DRILLING HOLES FOR ANCHOR INSTALLATION, CONTRACTOR SHALL LOCATE EXISTING STEEL REINFORCING WITH MAGNETIC METER OR OTHER NONDESTRUCTIVE TEST METHOD. SHIFT CONNECTIONS AS REQUIRED TO MISS REINFORCING.

NOTE: WHEN INSTALLING ANCHORS INTO CONCRETE, ANY DETERIORATED, SPALLING AND/OR DEFECTIVE CONCRETE ENCOUNTERED MUST BE BROUGHT TO THE IMMEDIATE ATTENTION OF THE OWNER'S REP. AND ARCHITECT FOR EVALUATION BEFORE CONTINUING WITH INSTALLATION OF THE CONNECTIONS.

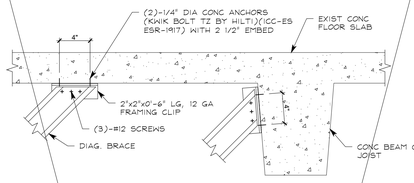

NOTE:
BEFORE INSTALLING ANCHORS, CONTRACTOR SHALL VERIFY WITH MALL MANAGEMENT THAT ATTACHMENT SHOWN IS ACCEPTABLE. CONTRACTOR MUST VERIFY WITH MALL MANAGEMENT THE ALLOWABLE DEPTH OF FASTENER PENETRATION.

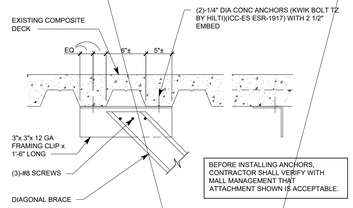

BEFORE INSTALLING ANCHORS, CONTRACTOR SHALL VERIFY WITH MALL MANAGEMENT THAT ATTACHMENT SHOWN IS ACCEPTABLE.

DIAGONAL PERPENDICULAR TO DECK SPAN

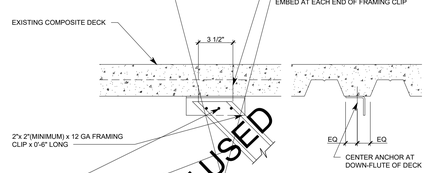

NOT USED

BEFORE INSTALLING ANCHORS, CONTRACTOR SHALL VERIFY WITH MALL MANAGEMENT THAT ATTACHMENT SHOWN IS ACCEPTABLE.

DIAGONAL PARALLEL TO DECK SPAN

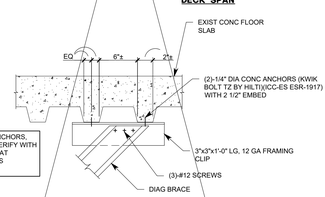

BEFORE INSTALLING ANCHORS, CONTRACTOR SHALL VERIFY WITH MALL MANAGEMENT THAT ATTACHMENT SHOWN IS ACCEPTABLE.

DIAG BRACE PERPENDICULAR TO DECK SPAN

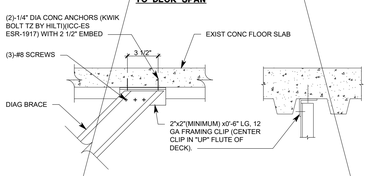

DIAG BRACE PARALLEL TO DECK SPAN

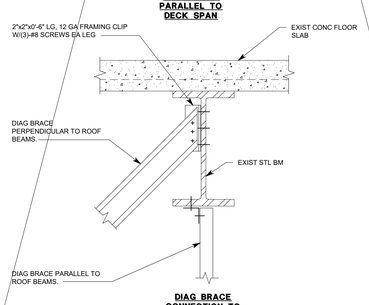

DIAG BRACE CONNECTION TO STEEL BEAM

TYPICAL DIAGONAL BRACING CONNECTION COMPOSITE MTL DECK/ CONC SLAB ON STL BEAMS | 1 1/2" = 1'-0" - | T

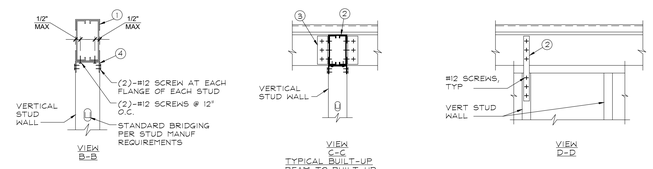

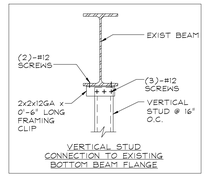

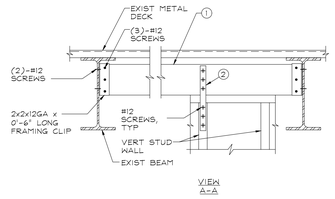

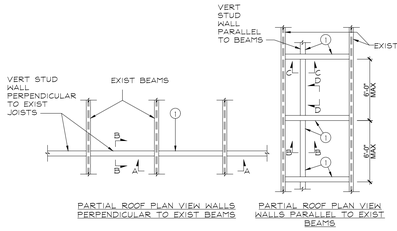

CODED NOTES:

1. DBL 6" DP, 16 GA BEAM WITH 3 5/8", 18 GA TRACK TOP & BOTTOM — #12 SCREW @ 12"c/c
2. AT ALL VERT STUDS WITH DIAGONAL STUD ATTACHED BELOW, ADD MIN 2"x14 GA STRAP EACH SIDE OF STUD AS SHOWN.
3. 2 x 2 x 12 GA x 6" LG FRAMING CLIP, EACH SIDE OF DBL JOIST W/(3)-#12 SCREWS EACH LEG.
4. 16 GA DEEP LEG TRACK

TYPICAL HANGING STUD CONNECTION ATTACHMENT TO EXISTING STEEL BEAMS | 1" = 1'-0" - | L

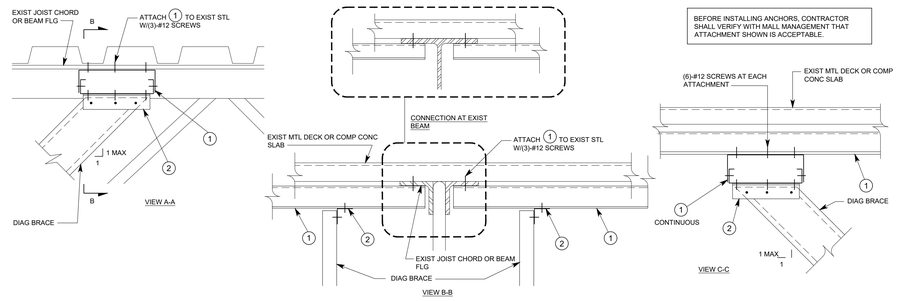

BEFORE INSTALLING ANCHORS, CONTRACTOR SHALL VERIFY WITH MALL MANAGEMENT THAT ATTACHMENT SHOWN IS ACCEPTABLE.

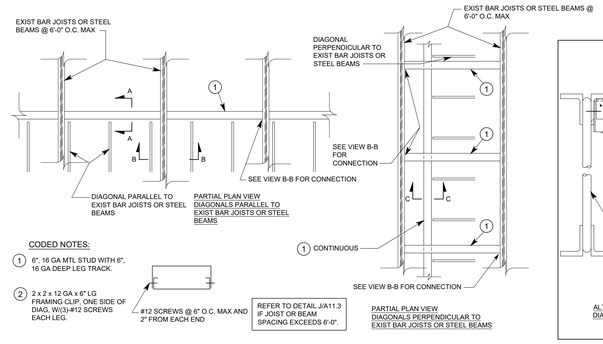

CODED NOTES:

1. 6", 16 GA MTL STUD WITH 6", 16 GA DEEP LEG TRACK.
2. 2 x 2 x 12 GA x 6" LG FRAMING CLIP, ONE SIDE OF DIAG, W/(3)-#12 SCREWS EACH LEG. — #12 SCREWS @ 6" O.C. MAX AND 2" FROM EACH END

REFER TO DETAIL J/A11.3 IF JOIST OR BEAM SPACING EXCEEDS 6'-0".

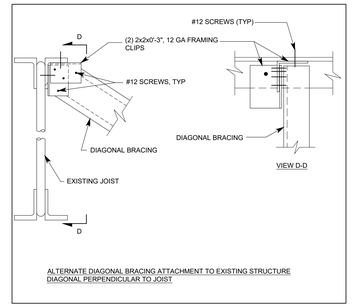

ALTERNATE DIAGONAL BRACING ATTACHMENT TO EXISTING STRUCTURE DIAGONAL PERPENDICULAR TO JOIST

TYPICAL DIAGONAL BRACING CONNECTION ATTACHMENT TO (E) BAR JOIST OR STEEL BEAM | 1" = 1'-0" - | C

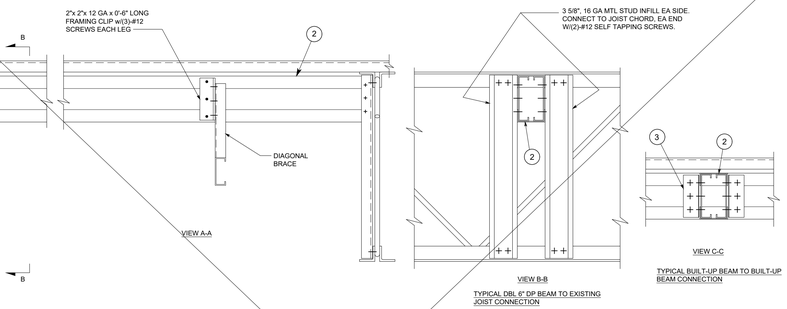

NOT USED

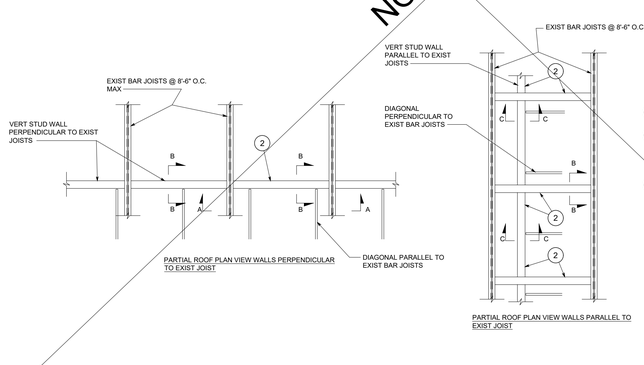

CODED NOTES:

1. EXISTING JOIST
2. DBL 6" DP, 16 GA BEAM WITH 3 5/8", 16 GA TRACK TOP & BOTTOM — #12 SCREW @ 12"c/c
3. 2 x 2 x 12 GA x 6" LG FRAMING CLIP,EACH SIDE OF 16 GA BEAM w/(3)-#12 SCREWS EACH LEG.

CONTACT ARCHITECT FOR REVISED DETAILS IF JOIST SPACING EXCEEDS 8'-6".

TYPICAL DIAGONAL BRACING CONNECTION ATTACHMENT TO EXISTING BAR JOIST | 1 1/2" = 1'-0" - | J

PRIOR TO DRILLING HOLES FOR ANCHOR INSTALLATION, CONTRACTOR SHALL LOCATE EXISTING STEEL REINFORCING WITH MAGNETIC METER OR OTHER NONDESTRUCTIVE TEST METHOD. SHIFT CONNECTIONS AS REQUIRED TO MISS REINFORCING.

NOTE: WHEN INSTALLING ANCHORS INTO CONCRETE, ANY DETERIORATED, SPALLING AND/OR DEFECTIVE CONCRETE ENCOUNTERED MUST BE BROUGHT TO THE IMMEDIATE ATTENTION OF THE OWNER'S REP. AND ARCHITECT FOR EVALUATION BEFORE CONTINUING WITH INSTALLATION OF THE CONNECTIONS.

NOT USED

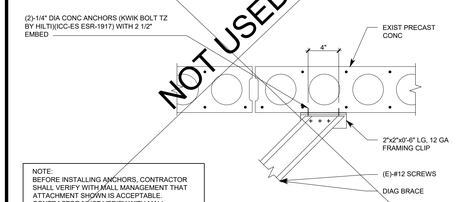

NOTE:
BEFORE INSTALLING ANCHORS, CONTRACTOR SHALL VERIFY WITH MALL MANAGEMENT THAT ATTACHMENT SHOWN IS ACCEPTABLE. CONTRACTOR MUST VERIFY WITH MALL MANAGEMENT THE ALLOWABLE DEPTH OF FASTENER PENETRATION.

TYPICAL DIAGONAL BRACING CONNECTION PRECAST CONCRETE PLANKS | 1 1/2" = 1'-0" - | F

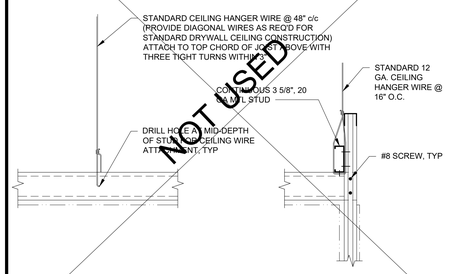

NOT USED

SUSPENDED FRAMING DETAIL | 1 1/2" = 1'-0" - | B

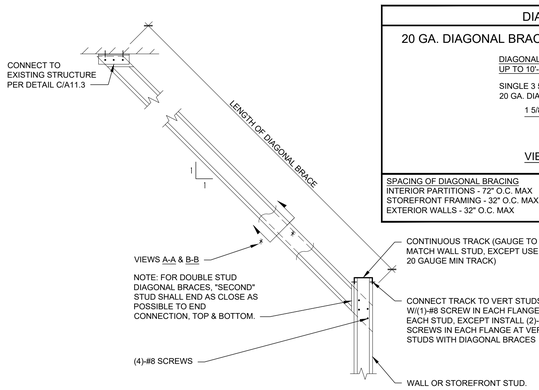

DIAGONAL BRACING OPTIONS

20 GA. DIAGONAL BRACE OPTIONS:

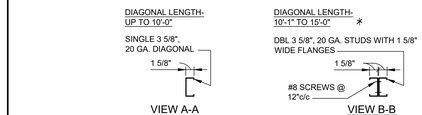

SPACING OF DIAGONAL BRACING
INTERIOR PARTITIONS - 72" O.C. MAX
STOREFRONT FRAMING - 32" O.C. MAX
EXTERIOR WALLS - 32" O.C. MAX

* CONTACT ARCHITECT FOR LENGTHS LONGER THAN 20'-0".

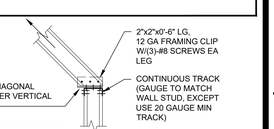

AT DIAGONAL BRACE, ATTACH TRACK TO WALL STUD w/(2)-#8 SCREWS EACH SIDE.

WALLS WHERE DIAGONAL IS ATTACHED TO TOP OF WALL

TYPICAL DIAGONAL BRACING SEISMIC DESIGN CATEGORIES A & B | 1" = 1'-0" - | A

OWNER:

5A LANDS' END LANE
DODGEVILLE, WI 53595

ARCHITECT / ENGINEER:

SHREMSHOCK
Shremshock Architects, Inc.
7400 W. Campus Rd. Suite 150 New Albany, OH 43054
t: 614 545 4550 | f: 614 545 4555 | shremshock.com
Gerald S. Shremshock, Architect
Timothy J. Shremshock, Architect

©2019 THE ARCHITECT / ENGINEER ASSUMES NO RESPONSIBILITY FOR THE USE OF THESE PLANS FOR ANY PROJECT OTHER THAN SPECIFICALLY AUTHORIZED BY THEM AND SIGNED AND SEALED FOR SUCH SPECIFIC LOCATION IN THE STATE, PROVINCE OR TERRITORY SHOWN ON THE SEAL. THIS BUILDING USE IS ONLY APPLICABLE IN AREAS MEETING THE STATED DESIGN CRITERIA.

LANDS' END

STORE NO:
TBD

PROJECT LOCATION:
CONGRESSIONAL PLAZA
1667 ROCKVILLE PIKE
SPACE #06
ROCKVILLE, MD 20852

DESIGN TYPE:
-

REVISIONS:

REQUIRED BY:	DATE
1 CLIENT, LANDLORD & B.D. COMMENTS	06/07/2019

* INDICATES NO REVISION TO THIS SHEET

Professional Certification

I certify that these documents were prepared or approved by me, and that I am a duly licensed architect under the laws of the State of Maryland license number 17246, expiration date February 28, 2021.

TYPICAL FRAMING DETAILS

DRAWN BY: JAW | CHECKED BY: BRW/ELM/RHW

DATE ISSUED: 06/07/2019
PROJECT NO: 190148
DRAWING NO:
A11.3

NOT USED R

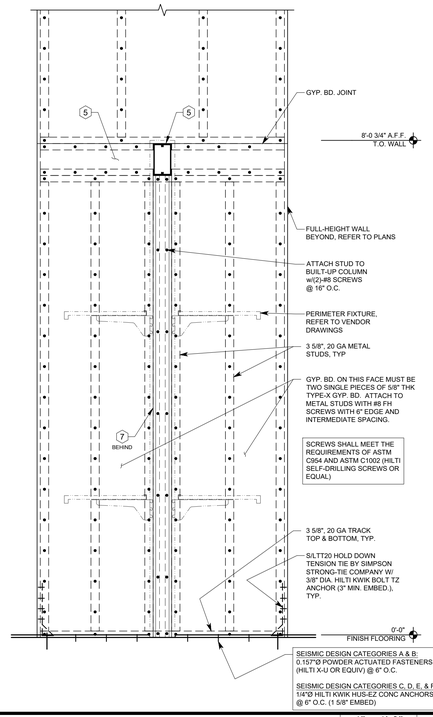

FIXTURE SECTION — 1" = 1'-0" / - L

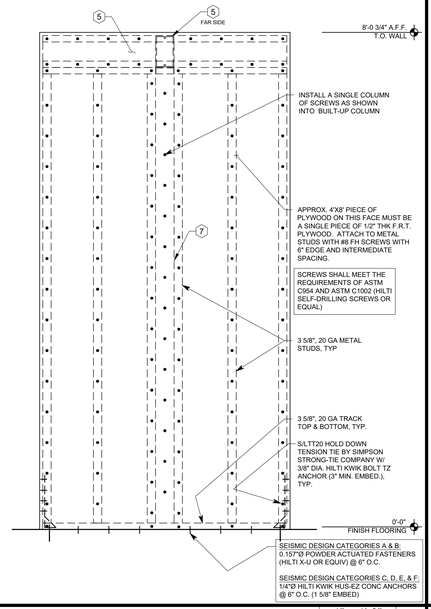

FIXTURE ELEVATION — 1" = 1'-0" / - G

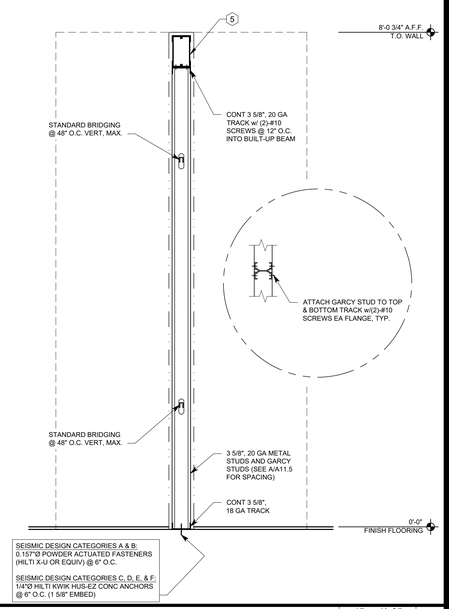

FIXTURE SECTION — 1" = 1'-0" / - C

NOT USED T

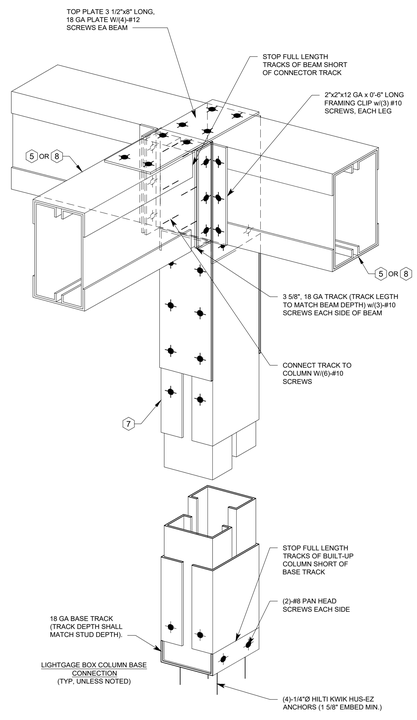

BUILT-UP COLUMN CONNECTIONS — N.T.S. / - N

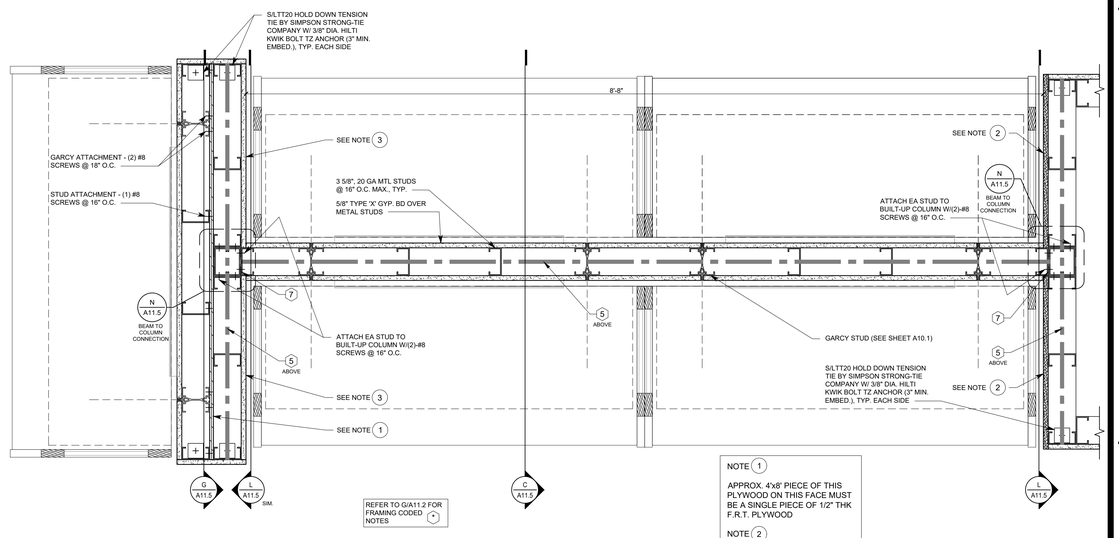

REFER TO G/A11.2 FOR FRAMING CODED NOTES

NOTE 1

APPROX. 4'x8' PIECE OF THIS PLYWOOD ON THIS FACE MUST BE A SINGLE PIECE OF 1/2" THK F.R.T. PLYWOOD

NOTE 2

APPROX. 1'-11"x8'-0" GYP. BD. ON THIS FACE MUST BE A SINGLE PIECE OF 5/8" THK TYPE-X GYP. BD.

NOTE 3

APPROX. 2'-0"X8'-0" GYP. BD. ON THIS FACE MUST BE A SINGLE PIECE OF 5/8" THK TYPE-X GYP. BD.

FIXTURE PLAN — 1 1/2" = 1'-0" / - A

OWNER:

5A LANDS' END LANE
DODGEVILLE, WI 53595

ARCHITECT / ENGINEER:

SHREMSHOCK
Shremshock Architects, Inc.
7400 W. Campus Rd. Suite 150 New Albany, OH 43054
t: 614 545-4550 | f: 614 545-4555 | shremshock.com
Gerald S. Shremshock, Architect
Timothy J. Shremshock, Architect

©2019 THE ARCHITECT / ENGINEER ASSUMES NO RESPONSIBILITY FOR THE USE OF THESE PLANS FOR ANY PROJECT OTHER THAN SPECIFICALLY AUTHORIZED BY THEM AND SIGNED AND SEALED FOR SUCH SPECIFIC LOCATION IN THE STATE, PROVINCE OR TERRITORY SHOWN ON THE SEAL. THIS BUILDING USE IS ONLY APPLICABLE IN AREAS MEETING THE STATED DESIGN CRITERIA.

LANDS' END

STORE NO:
TBD

PROJECT LOCATION:
CONGRESSIONAL PLAZA
1667 ROCKVILLE PIKE
SPACE #06
ROCKVILLE, MD 20852

DESIGN TYPE:
-

REVISIONS:

REQUIRED BY:		DATE
1	CLIENT, LANDLORD & B.D. COMMENTS	07/19/2019

* INDICATES NO REVISION TO THIS SHEET

Professional Certification

I certify that these documents were prepared or approved by me, and that I am a duly licensed architect under the laws of the State of Maryland license number 17246, expiration date February 28, 2021.

FRAMING DETAILS

DRAWN BY: JAW CHECKED BY: BRW/ELM/RHW

DATE ISSUED: 06/07/2019
PROJECT NO: 190148
DRAWING NO:
A11.5

NOT USED R

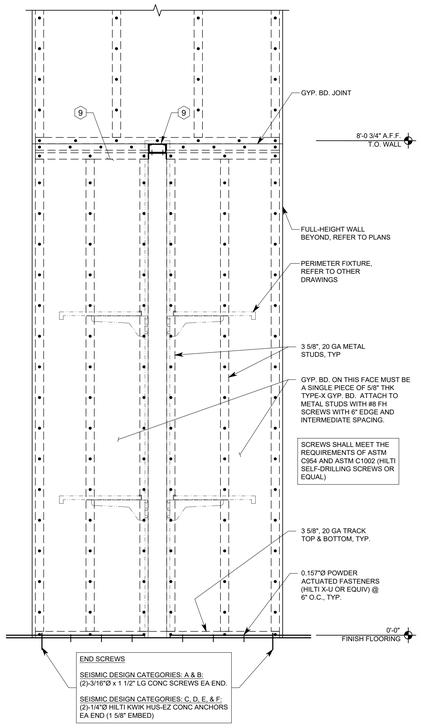

FIXTURE SECTION 1" = 1'-0" - L

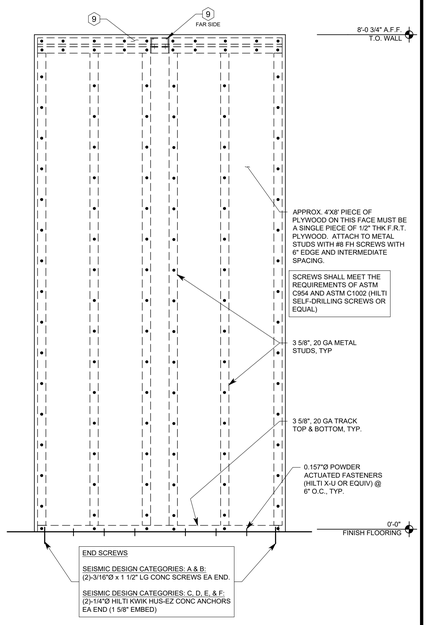

FIXTURE ELEVATION 1" = 1'-0" - G

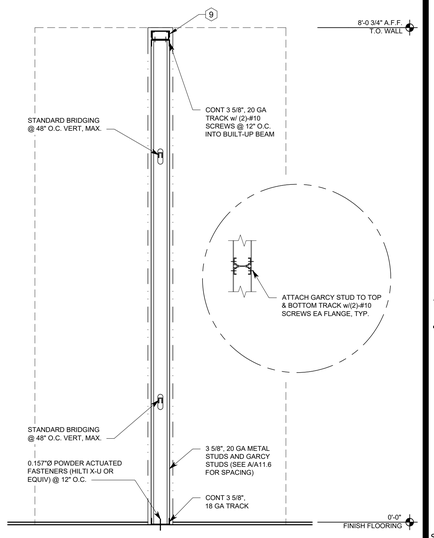

FIXTURE SECTION 1" = 1'-0" - C

NOT USED U

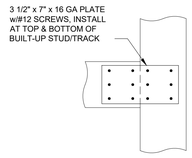

BUILT-UP BEAM CONNECTIONS N.T.S. - P

NOT USED T

NOT USED N

NOT USED J

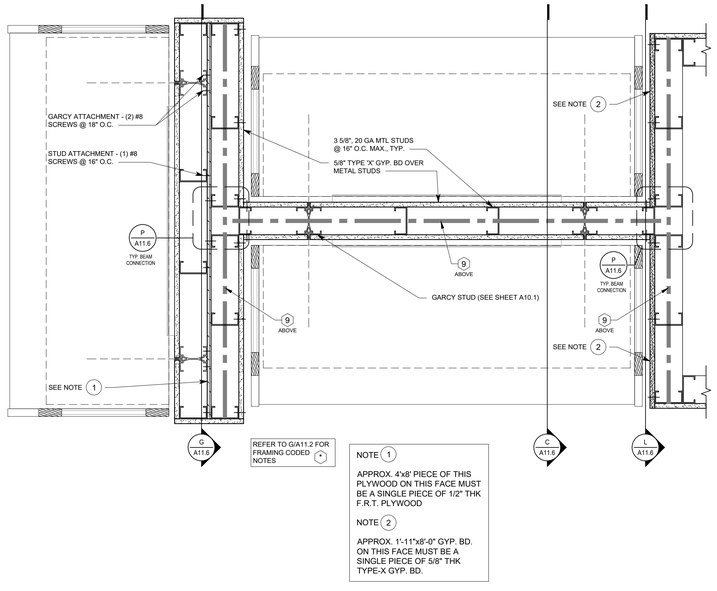

FIXTURE PLAN 1 1/2" = 1'-0" - A

OWNER:

5A LANDS' END LANE
DODGEVILLE, WI 53595

ARCHITECT / ENGINEER:

SHREMSHOCK
Shremshock Architects, Inc.
7400 W. Campus Rd. Suite 150 New Albany, OH 43054
t: 614 545-4550 | f: 614 545-4555 | shremshock.com
Gerald S. Shremshock, Architect
Timothy J. Shremshock, Architect

©2019 THE ARCHITECT / ENGINEER ASSUMES NO RESPONSIBILITY FOR THE USE OF THESE PLANS FOR ANY PROJECT OTHER THAN SPECIFICALLY AUTHORIZED BY THEM AND SIGNED AND SEALED FOR SUCH SPECIFIC LOCATION IN THE STATE, PROVINCE OR TERRITORY SHOWN ON THE SEAL. THIS BUILDING USE IS ONLY APPLICABLE IN AREAS MEETING THE STATED DESIGN CRITERIA.

LANDS' END

STORE NO:
TBD

PROJECT LOCATION:
CONGRESSIONAL PLAZA
1667 ROCKVILLE PIKE
SPACE #06
ROCKVILLE, MD 20852

DESIGN TYPE:
-

REVISIONS:

REQUIRED BY:		DATE
1	CLIENT, LANDLORD & B.D. COMMENTS	07/19/2019

* INDICATES NO REVISION TO THIS SHEET

Professional Certification

I certify that these documents were prepared or approved by me, and that I am a duly licensed architect under the laws of the State of Maryland license number 17246, expiration date February 28, 2021.

FRAMING DETAILS

DRAWN BY: JAW CHECKED BY: BRW/ELM/RHW

DATE ISSUED: 06/07/2019
PROJECT NO: 190148
DRAWING NO:
A11.6

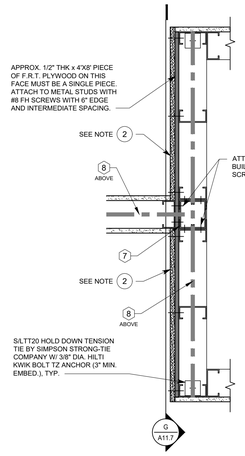

END WALL (SEISMIC C, D, E, & F) 1 1/2" = 1'-0" - V

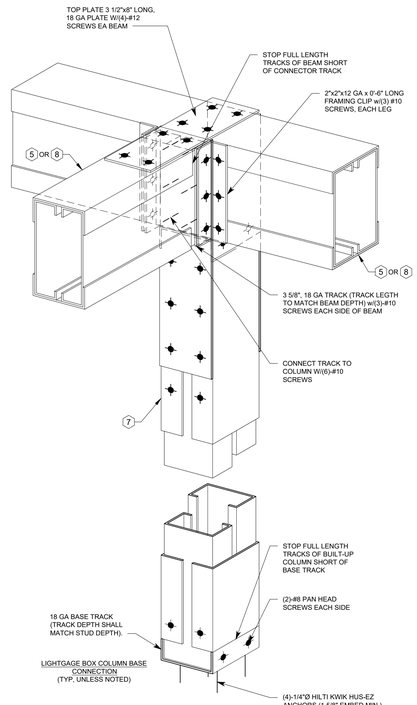

BUILT-UP COLUMN CONNECTIONS N.T.S. - R

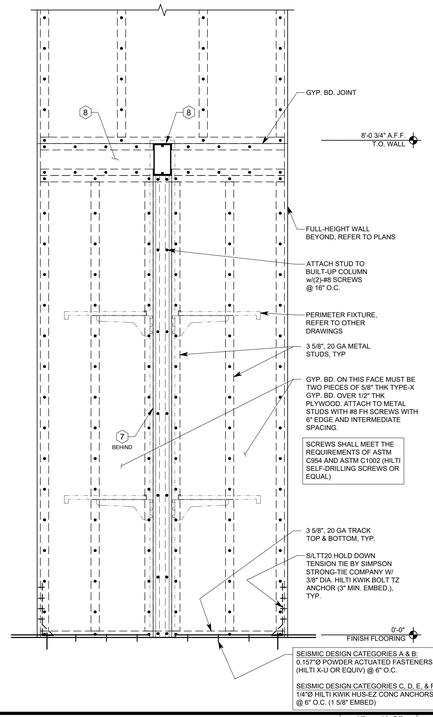

FIXTURE SECTION 1" = 1'-0" - L

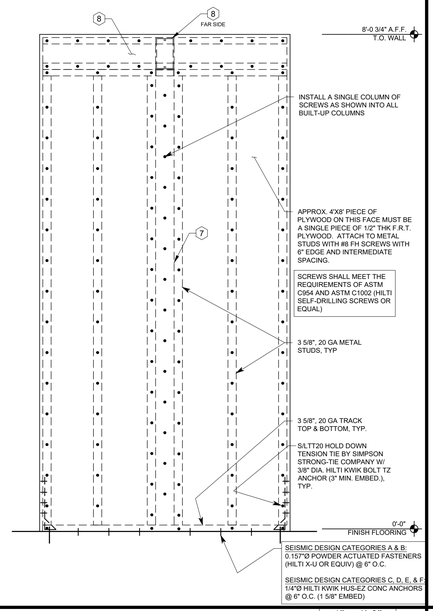

FIXTURE ELEVATION 1" = 1'-0" - G

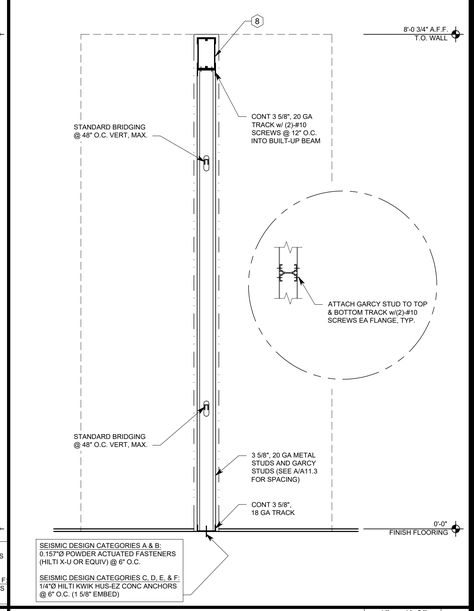

FIXTURE SECTION 1" = 1'-0" - C

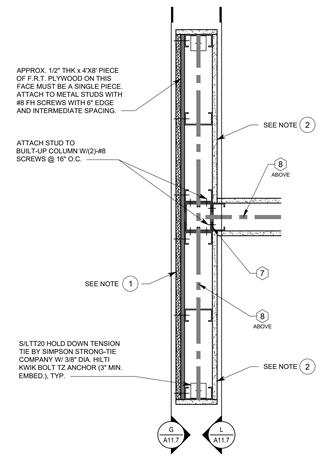

END WALL (SEISMIC C, D, E, & F) 1 1/2" = 1'-0" - T

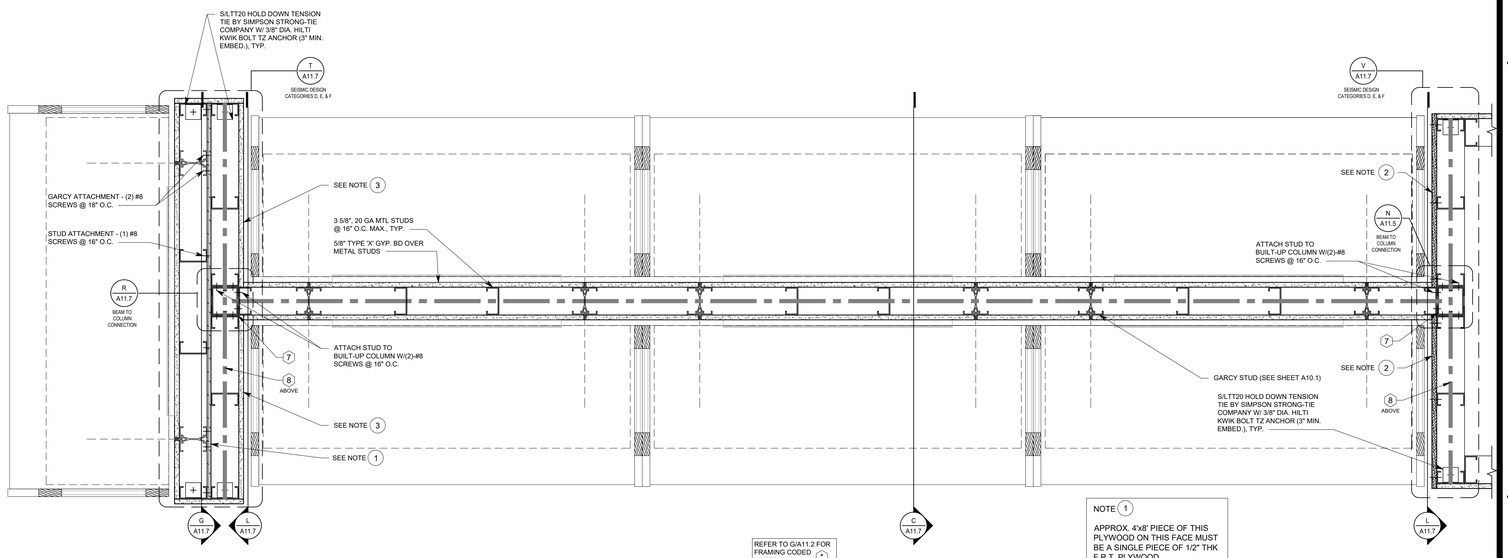

REFER TO G/A11.2 FOR FRAMING CODED NOTES

END WALL FINISHES FOR SEISMIC DESIGN CATEGORIES A & B SHOWN.

SEE DETAILS N & T/A11.7 FOR SEISMIC DESIGN C, D, E, & F.

NOTE 1

APPROX. 4'x8' PIECE OF THIS PLYWOOD ON THIS FACE MUST BE A SINGLE PIECE OF 1/2" THK F.R.T. PLYWOOD

NOTE 2

APPROX. 1'-11"x8'-0" GYP. BD. ON THIS FACE MUST BE A SINGLE PIECE OF 5/8" THK TYPE-X GYP. BD.

NOTE 3

APPROX. 2'-0"X8'-0" GYP. BD. ON THIS FACE MUST BE A SINGLE PIECE OF 5/8" THK TYPE-X GYP. BD.

FIXTURE PLAN 1 1/2" = 1'-0" - A

OWNER:

5A LANDS' END LANE
DODGEVILLE, WI 53595

ARCHITECT / ENGINEER:

SHREMSHOCK
Shremshock Architects, Inc.
7400 W. Campus Rd. Suite 150 New Albany, OH 43054
t: 614 545-4555 | f: 614 545-4550 | shremshock.com
Gerald S. Shremshock, Architect
Timothy J. Shremshock, Architect

©2019 THE ARCHITECT / ENGINEER ASSUMES NO RESPONSIBILITY FOR THE USE OF THESE PLANS FOR ANY PROJECT OTHER THAN SPECIFICALLY AUTHORIZED BY THEM AND SIGNED AND SEALED FOR SUCH SPECIFIC LOCATION IN THE STATE, PROVINCE OR TERRITORY SHOWN ON THE SEAL. THIS BUILDING USE IS ONLY APPLICABLE IN AREAS MEETING THE STATED DESIGN CRITERIA.

LANDS' END

STORE NO:
TBD

PROJECT LOCATION:
CONGRESSIONAL PLAZA
1667 ROCKVILLE PIKE
SPACE #06
ROCKVILLE, MD 20852

DESIGN TYPE:
-

REVISIONS:

REQUIRED BY:		DATE
1	CLIENT, LANDLORD & B.D. COMMENTS	07/19/2019

* INDICATES NO REVISION TO THIS SHEET

Professional Certification

I certify that these documents were prepared or approved by me, and that I am a duly licensed architect under the laws of the State of Maryland license number 17246, expiration date February 28, 2021.

FRAMING DETAILS

DRAWN BY: JAW CHECKED BY: BRW/ELM/RHW

DATE ISSUED: 06/07/2019
PROJECT NO: 190148
DRAWING NO:
A11.7

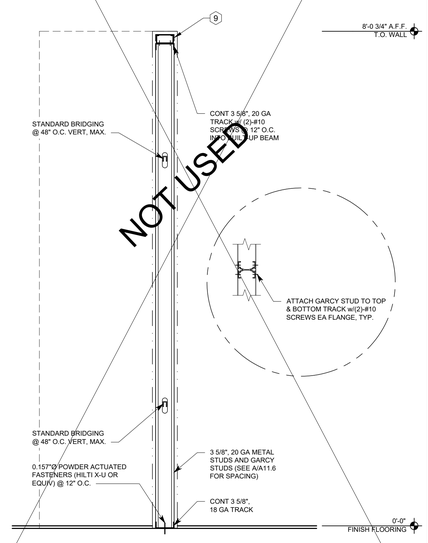

STOREFRONT FRAMING DETAIL | 1" = 1'-0" | - | V

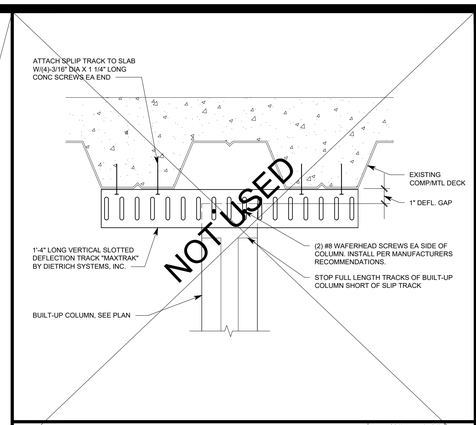

COLUMN TO CONCRETE/MTL DECK | 1 1/2" = 1'-0" | - | M

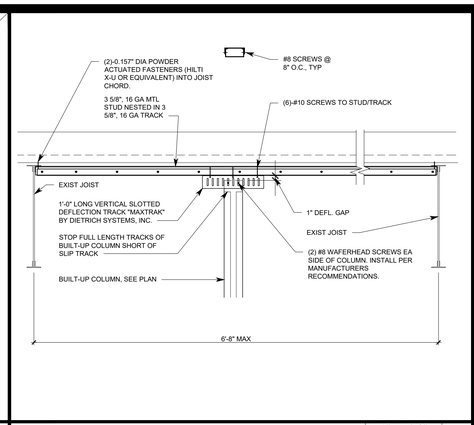

COLUMN TO EXISTING BAR JOIST | 1" = 1'-0" | - | H

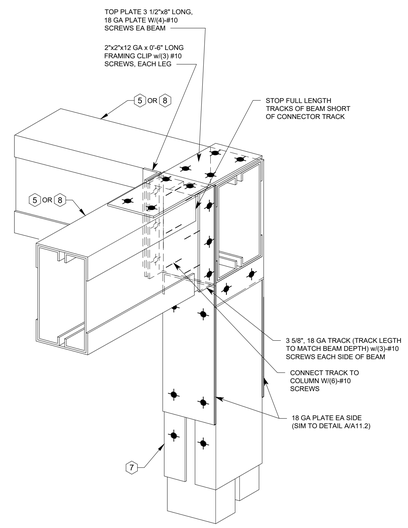

BUILT-UP COLUMN CONNECTIONS | N.T.S. | - | C

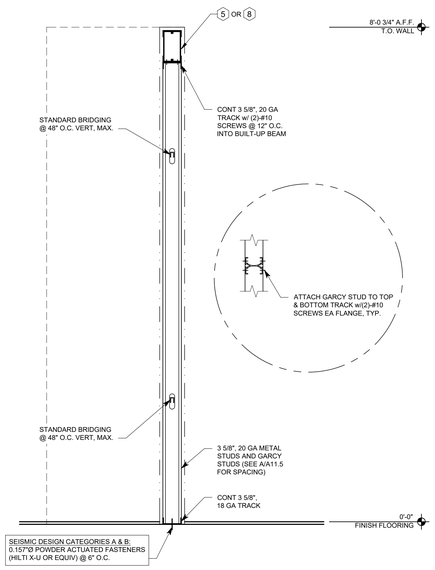

STOREFRONT FRAMING DETAIL | 1" = 1'-0" | - | T

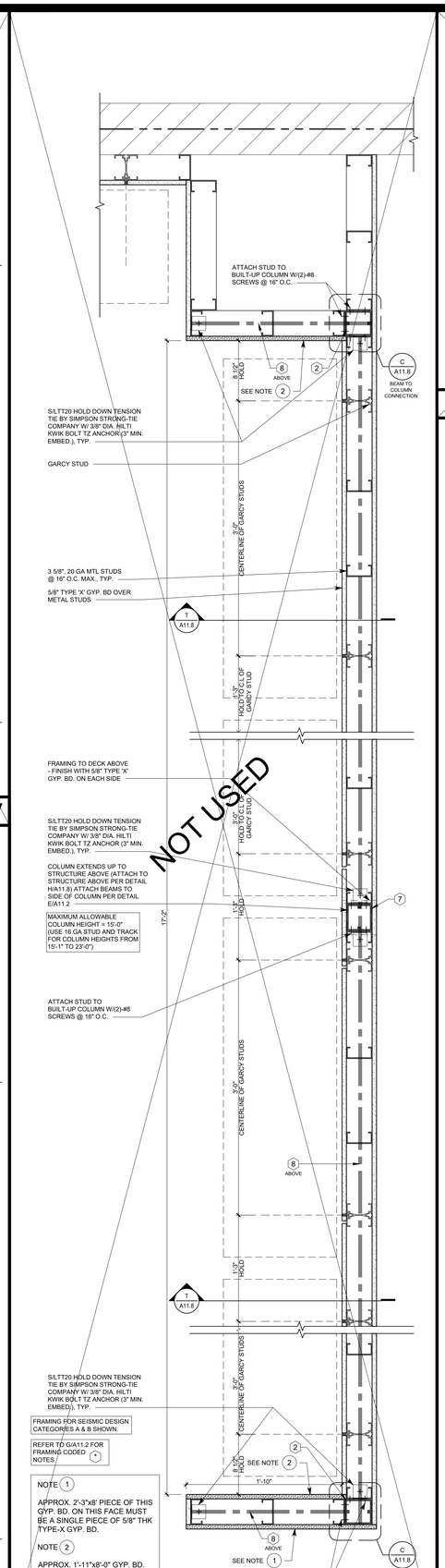

STOREFRONT FRAMING DETAIL | 1 1/2" = 1'-0" | - | N

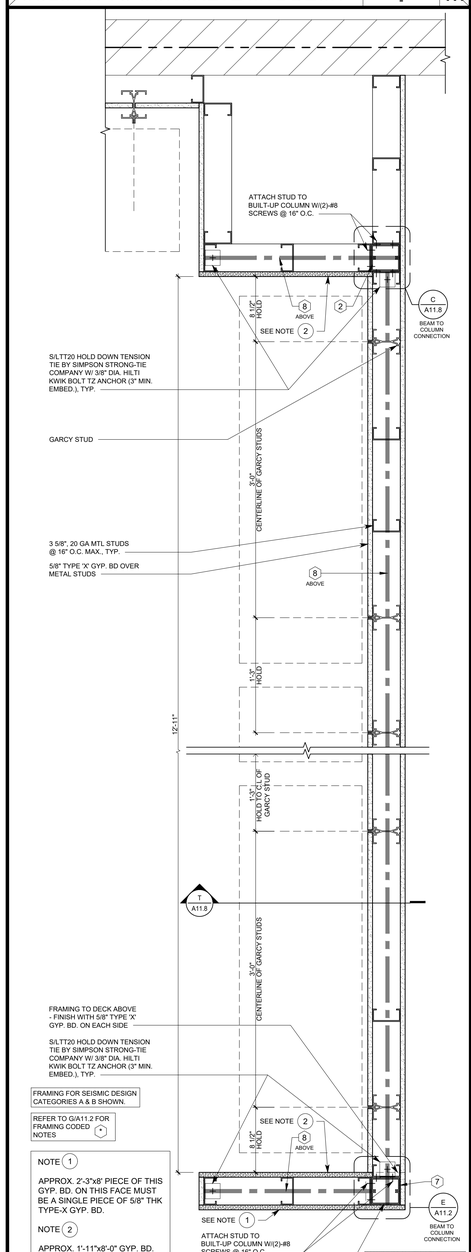

STOREFRONT FRAMING DETAIL | 1 1/2" = 1'-0" | - | J

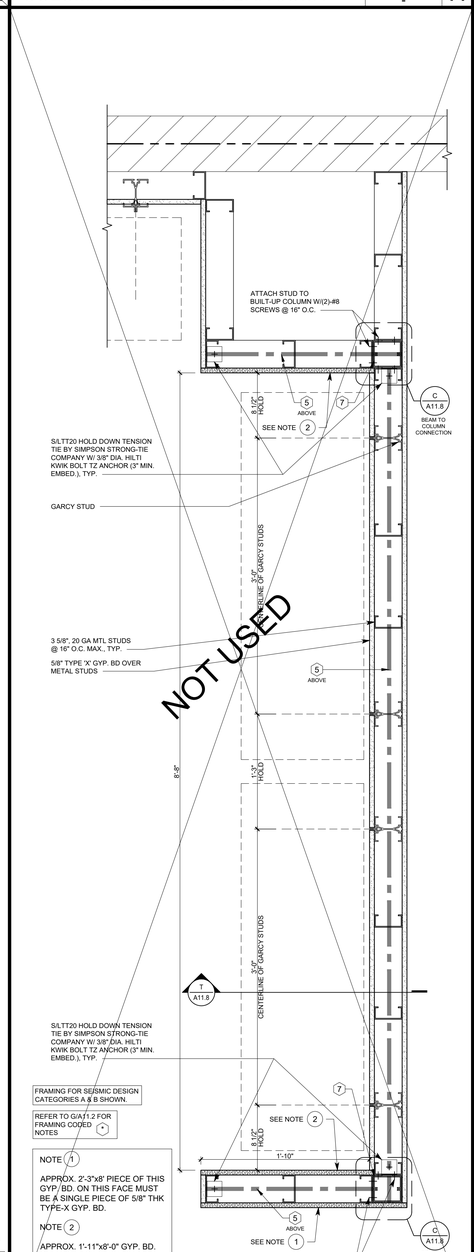

STOREFRONT FRAMING DETAIL | 1 1/2" = 1'-0" | - | E

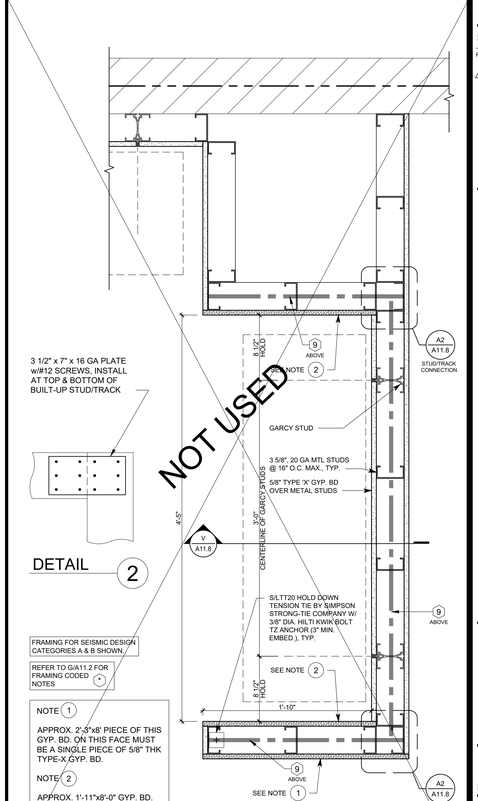

STOREFRONT FRAMING DETAIL | 1 1/2" = 1'-0" | - | A

OWNER:

5A LANDS' END LANE
DODGEVILLE, WI 53595

ARCHITECT / ENGINEER:

SHREMSHOCK
Shremshock Architects, Inc.
7400 W. Campus Rd. Suite 150 New Albany, OH 43054
t: 614 545-4550 | f: 614 545-4555 | shremshock.com
Gerald S. Shremshock, Architect
Timothy J. Shremshock, Architect

©2019 THE ARCHITECT / ENGINEER ASSUMES NO RESPONSIBILITY FOR THE USE OF THESE PLANS FOR ANY PROJECT OTHER THAN SPECIFICALLY AUTHORIZED BY THEM AND SIGNED AND SEALED FOR SUCH SPECIFIC LOCATION IN THE STATE, PROVINCE OR TERRITORY SHOWN ON THE SEAL. THIS BUILDING USE IS ONLY APPLICABLE IN AREAS MEETING THE STATED DESIGN CRITERIA.

LANDS' END

STORE NO:
TBD

PROJECT LOCATION:
CONGRESSIONAL PLAZA
1667 ROCKVILLE PIKE
SPACE #06
ROCKVILLE, MD 20852

DESIGN TYPE:
-

REVISIONS:

REQUIRED BY:		DATE
1	CLIENT, LANDLORD & B.D. COMMENTS	07/19/2019

* INDICATES NO REVISION TO THIS SHEET

Professional Certification

I certify that these documents were prepared or approved by me, and that I am a duly licensed architect under the laws of the State of Maryland license number 17246 expiration date February 28, 2021.

FRAMING DETAILS

DRAWN BY: JAW | CHECKED BY: BRW/ELM/RHW

DATE ISSUED: 06/07/2019
PROJECT NO: 190148

DRAWING NO:
A11.8

NOT USED W

NOT USED S

FLOORING DETAIL — N.T.S. - M

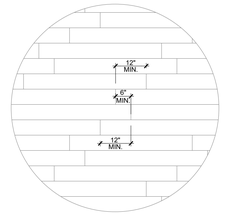

RANDOM PLANK LAYOUT

NON-SALES WALL BASE DETAIL — 3" = 1'-0" - H

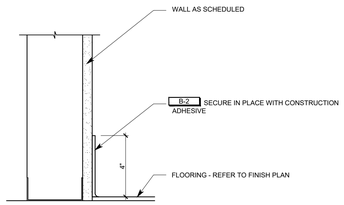

SALES WALL BASE DETAIL — 3" = 1'-0" - D

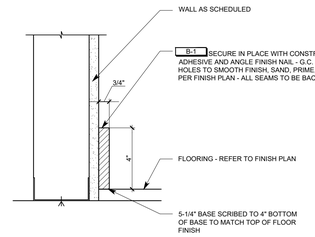

NOT USED V

NOT USED R

NOT USED L

FLOOR TRANSITION DETAIL — N.T.S. - G

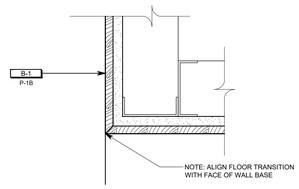

FLOOR TRANSITION DETAIL — FULL - C

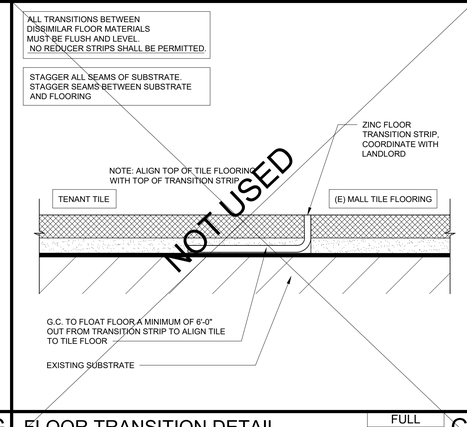

NOT USED U

NOT USED P

FLOOR TRANSITION DETAIL — FULL - K

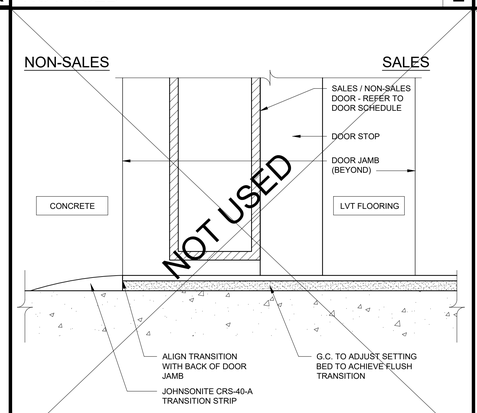

FLOOR TRANSITION DETAIL — FULL - F

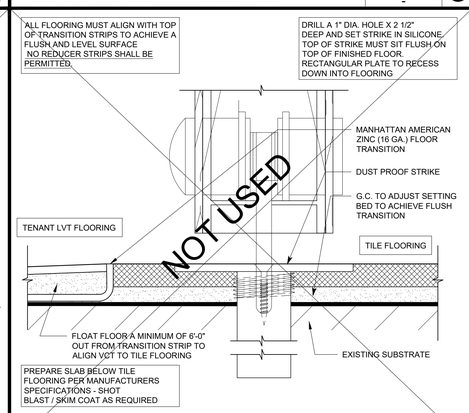

FLOOR TRANSITION DETAIL — FULL - B

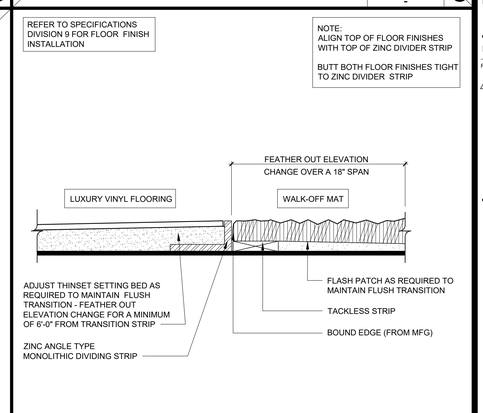

NOT USED T

FLOOR TRANSITION DETAIL — FULL - N

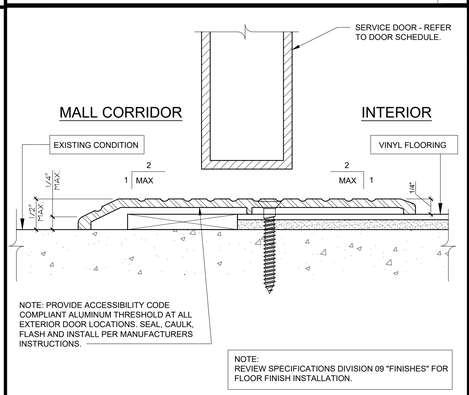

FLOOR TRANSITION DETAIL — FULL - J

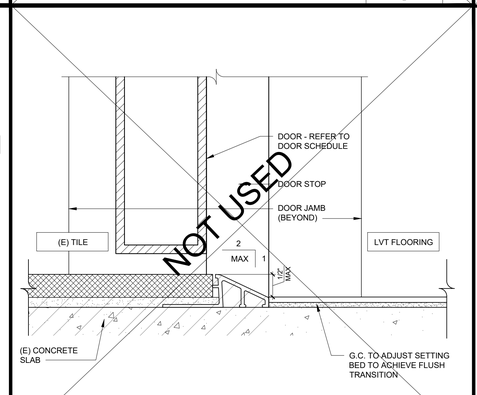

FLOOR TRANSITION DETAIL — FULL - E

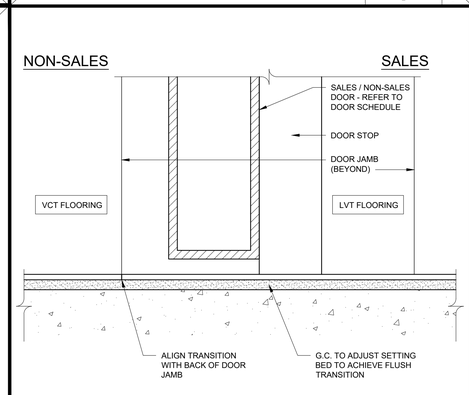

FLOOR TRANSITION DETAIL — FULL - A

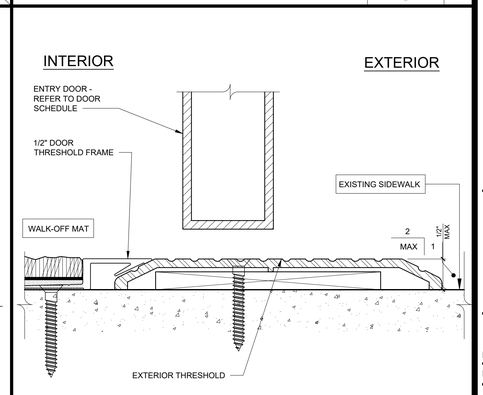

OWNER:

5A LANDS' END LANE
DODGEVILLE, WI 53595

ARCHITECT / ENGINEER:

SHREMSHOCK
Shremshock Architects, Inc.
7400 W. Campus Rd. Suite 150 New Albany, OH 43054
t: 614 545 4550 | f: 614 545 4555 | shremshock.com
Gerald S. Shremshock, Architect
Timothy J. Shremshock, Architect

©2019 THE ARCHITECT / ENGINEER ASSUMES NO RESPONSIBILITY FOR THE USE OF THESE PLANS OR THESE PLANS FOR ANY PROJECT OTHER THAN SPECIFICALLY AUTHORIZED BY THEM AND SIGNED AND SEALED FOR SUCH SPECIFIC LOCATION IN THE STATE, PROVINCE OR TERRITORY SHOWN ON THE SEAL. THIS BUILDING USE IS ONLY APPLICABLE IN AREAS MEETING THE STATED DESIGN CRITERIA.

LANDS' END

STORE NO:
TBD

PROJECT LOCATION:
CONGRESSIONAL PLAZA
1667 ROCKVILLE PIKE
SPACE #06
ROCKVILLE, MD 20852

DESIGN TYPE:
-

REVISIONS:

REQUIRED BY:		DATE
1	CLIENT, LANDLORD & B.D. COMMENTS	07/19/2019

* INDICATES NO REVISION TO THIS SHEET

Professional Certification

I certify that these documents were prepared or approved by me, and that I am a duly licensed architect under the laws of the State of Maryland license number 17246, expiration date February 28, 2021.

FLOOR TRANSITION & BASE DETAILS

DRAWN BY: JAW CHECKED BY: BRW/ELM/RHW

DATE ISSUED: 06/07/2019
PROJECT NO: 190148
DRAWING NO:
A12.1

DRINKING FOUNTAIN NOTE:
IF THE DRINKING FOUNTAIN IS LOCATED IN THE PATH OF TRAVEL, A TEXTURED AREA 1'-0" AROUND THE FOUNTAIN, CLEARLY IDENTIFIABLE BY THE BLIND IS REQUIRED. DRINKING FOUNTAIN IS TO BE ACTIVATED BY AN ACCESSIBLE PUSH BAR ON FRONT FACE OF UNIT. FOUNTAINS MUST BE APPROACHED FROM THE FRONT, OR PROVIDE A 60" DIAMETER TURNING SPACE TO ALLOW FOR POSITIONING INTO FORWARD APPROACH.

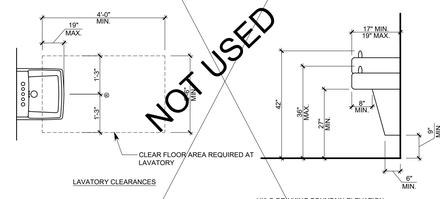

LAVATORY CLEARANCES

HI/LO DRINKING FOUNTAIN ELEVATION

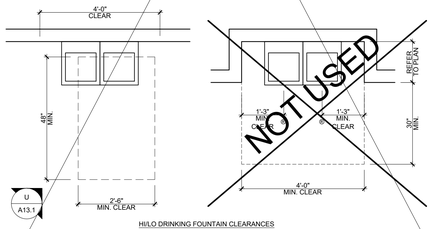

HI/LO DRINKING FOUNTAIN CLEARANCES

LAV. & DRINKING FOUNTAIN DETAILS — 1/2" = 1'-0" — V

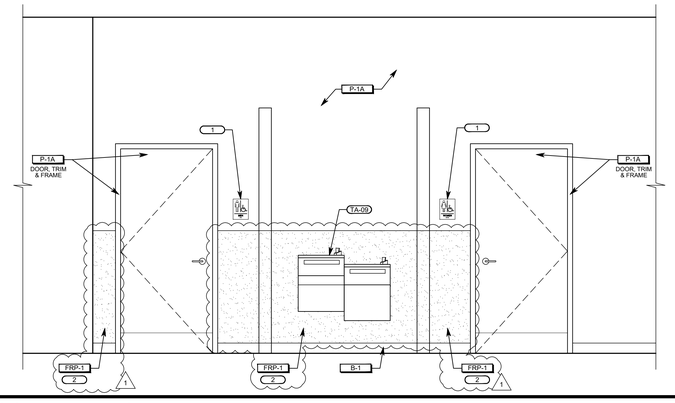

TOILET ROOM ELEVATION — 1/2" = 1'-0" — M

GENERAL CLEARANCE NOTES:

- TOE CLEARANCE
  GENERAL: SPACE BENEATH AN ELEMENT BETWEEN 9 INCHES ABOVE THE FLOOR SHALL BE CONSIDERED TOE CLEARANCE MAXIMUM DEPTH: TOE CLEARANCE SHALL BE PERMITTED TO EXTEND 25 INCHES MAXIMUM UNDER AN ELEMENT MINIMUM DEPTH: WHERE TOE CLEARANCE IS REQUIRED BENEATH AN ELEMENT AS PART OF A CLEAR FLOOR SPACE, THE TOE CLEARANCE SHALL EXTEND 17 INCHES MINIMUM BENEATH THE ELEMENT
- KNEE CLEARANCE
  GENERAL: SPACE BENEATH AN ELEMENT BETWEEN 9 INCHES AND 27 INCHES ABOVE THE FLOOR SHALL BE CONSIDERED KNEE CLEARANCE MAXIMUM DEPTH: KNEE CLEARANCE SHALL BE PERMITTED TO EXTEND 25 INCHES MAXIMUM UNDER AN ELEMENT AT 9 INCHES ABOVE THE FLOOR MINIMUM DEPTH: WHERE KNEE CLEARANCE IS REQUIRED BENEATH AN ELEMENT AS PART OF A CLEAR FLOOR SPACE, THE KNEE CLEARANCE SHALL BE 11 INCHES MINIMUM IN DEPTH AT 9 INCHES ABOVE THE FLOOR, AND 8 INCHES MINIMUM IN DEPTH AT 27 INCHES ABOVE THE FLOOR

SINK NOTES:
1. HOT WATER PIPES AND DRAIN PIPES UNDER LAVATORIES SHALL BE INSULATED TO CONFORM WITH ALL LOCAL, STATE, AND FEDERAL ACCESSIBILITY AND ENERGY CODE REQUIREMENTS.
2. NO SHARP OR ABRASIVE SURFACES ALLOWED UNDER SINKS.
3. FAUCET CONTROLS AND OPERATING MECHANISMS MUST BE EASILY OPERATED BY ONE HAND AND MUST NOT REQUIRE GRASPING, PINCHING, OR TWISTING OF THE WRIST.
4. THE FORCE NEEDED TO ACTIVATE CONTROLS SHALL NOT EXCEED 5 LBS.

WATER CLOSET NOTES:
1. CONTROLS FOR FLUSH VALVES SHALL BE MOUNTED ON THE WIDE SIDE OF THE WATER CLOSET AREA, NO MORE THAN 44" A.F.F.

NOTE: GC TO CONFIRM RESTROOM FIXTURES ARE INSTALLED PER CURRENT ACCESSIBILITY REQUIREMENTS. REFER TO TOILET ROOM ELEVATION DETAILS FOR PROPER MOUNTING LOCATIONS. REMOVE, PLACE AND/OR RELOCATE EXISTING AS REQUIRED.

ACCESSIBILITY NOTES — H

GENERAL NOTES
1. INSTALL ACCESSORIES AND LIGHT FIXTURES WITH SCREWS OR BOLTS EXTENDING AT LEAST 1" INTO SOLID BLOCKING.
2. 60" TURNING AREA TO BE PROVIDED IN ACCESSIBLE TOILET ROOMS.
3. ALL RESTROOM ACCESSORIES, NOT INDICATED OTHERWISE, ARE PROVIDED AND INSTALLED BY G.C.
4. ELEVATIONS SHOW MOUNTING HEIGHTS AND LOCATIONS REQUIRED TO COMPLY WITH ACCESSIBLE CODE. RELOCATE EXISTING ACCESSORIES AS NEEDED TO COMPLY.

#	DESCRIPTION
1	ACCESSIBILITY SIGNAGE - REFER TO G/A13.1
2	WAINSCOT TO 48" A.F.F.
~~3~~	~~WAINSCOT EDGE CAP~~
4	ACCESSIBLE TURNING SPACE (60" DIAMETER AS SHOWN)
5	LIGHT SWITCH
6	18"X18" CLEAR FLOOR SPACE AT CLOSURE SIDE OF DOOR FOR SIGNAGE
7	ACCESSIBLE MANEUVERING SPACE
~~8~~	~~PATCH, REPAIR, OR REPLACE WALL FINISHES AS REQUIRED TO ACCOMMODATE RELOCATED ACCESSORIES AND FIXTURES~~
~~9~~	~~RELOCATED SINK - REFER TO PLUMBING DRAWINGS~~
10	(E) WATER HEATER ON SHELF ABOVE TOILET ROOM

GENERAL AND CODED NOTES — D

#	QTY.	DESCRIPTION	FURNISHED BY	INSTALLED BY	REMARK
TA-01	2	TOILET	EXISTING	EXISTING	7
TA-02	2	36" GRAB BAR	EXISTING	EXISTING	7
TA-03	2	42" GRAB BAR	EXISTING	EXISTING	7
TA-04	2	18" VERTICAL GRAB BAR - BOBRICK	EXISTING	EXISTING	1, 4, 5
TA-05	2	TOILET TISSUE HOLDER	EXISTING	EXISTING	7
TA-06	2	24" x 36" MIRROR	EXISTING	EXISTING	7
TA-07	2	SOAP DISPENSER - BOBRICK	EXISTING	EXISTING	4, 5
TA-08	2	ELECTRIC HAND DRYER - EXCEL XL-SB XLERATOR STAINLESS STEEL WITH ADA COMPLIANT RECESS KIT	G.C.	G.C.	4, 5
TA-09	2	HI/LO DRINKING FOUNTAIN	EXISTING	EXISTING	-
TA-10	2	LAVATORY	EXISTING	EXISTING	3, 7
TA-11	1	MOP SINK	EXISTING	EXISTING	7
TA-12	2	COAT HOOK - BOBRICK, B-672	G.C.	G.C.	4

REMARKS:
1. ~~1-1/2" STAINLESS STEEL GRAB BAR WITH 1-1/2" CLEARANCE BETWEEN GRAB BAR AND WALL SURFACE. PROVIDE BLOCKING AS REQUIRED FOR A SAFE AND SOLID MOUNTING. REFER TO DETAIL R/A13.1.~~
2. ~~REFER TO PLUMBING DRAWINGS~~
3. PROVIDE "TRUEBRO LAV GUARD 2 E-Z SERIES" UNDERSINK PIPING COVER FOR DRAIN VALVES AND SUPPLY. INSULATE THE HOT AND COLD WATER LINES. COORDINATE WITH PLUMBING DRAWINGS.
4. REFER TO TOILET ROOM ACCESSIBILITY NOTES H/A13.1 AND ENLARGED TOILET ROOM PLAN A/A13.1 FOR MOUNTING LOCATIONS AND HEIGHTS.
5. PROVIDE BLOCKING PER DETAIL R/A13.1 AND LOCATE PER TOILET ROOM ACCESSIBILITY NOTES H/A13.1
6. ~~FLUSH VALVE LEVER TO THE APPROACH SIDE OF THE WATER CLOSET AREA.~~
7. CLEAN TO LIKE NEW CONDITION AND REPAIR TO PROPER WORKING ORDER

GRAB BAR NOTES:
GRAB BARS SHALL NOT ROTATE AND HAVE NO SHARP, OR ABRASIVE ELEMENTS ON OR ADJACENT TO THEM. EDGES ARE TO HAVE A MINIMUM OF 1/8" RADIUS. GRAB BAR BACKING AND ATTACHMENT SHALL BE CONSTRUCTED FOR A 250 POUND POINT LOAD

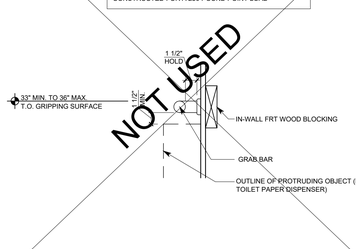

GRAB BAR DETAIL — N.T.S. — R

G.C. TO SEAL ALL JOINTS AND TOP EDGE OF F.R.P. WITH MILDEW-RESISTANT SEALANT.

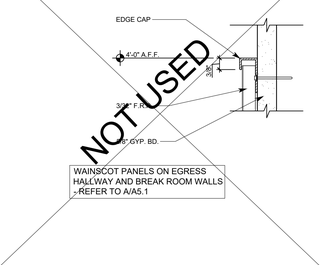

WAINSCOT PANELS ON EGRESS HALLWAY AND BREAK ROOM WALLS - REFER TO A/A5.1

WAINSCOT DETAIL — 6" = 1'-0" — L

DOOR SIGNAGE NOTES:
1. LETTERS & NUMBERS SHALL BE RAISED 1/32", UPPER CASE, SANS SERIF OR SIMPLE SERIF TYPE SHALL BE ACCOMPANIED W/ GRADE 2 BRAILLE. RAISED CHARACTERS SHALL BE AT LEAST 5/8" HIGH, BUT NO HIGHER THAN 2". PICTOGRAMS SHALL BE ACCOMPANIED BY THE EQUIVALENT VERBAL DESCRIPTION PLACED DIRECTLY BELOW THE PICTOGRAMS. THE BORDER DIMENSION OF THE PICTOGRAM SHALL BE 6" MIN. IN HEIGHT.
2. ACCESSIBILITY SYMBOL TO BE MOUNTED ON WALL ADJACENT TO THE LATCH SIDE OF THE DOOR AND AT 60" MAX. A.F.F. TO CENTERLINE OF THE PICTOGRAM. MAINTAIN 18"X18" MIN. CLEAR FLOOR SPACE IN FRONT OF SIGN (FROM CENTERLINE OF SIGNAGE)
3. EDGES OF SIGNS SHALL BE ROUNDED, CHAMFERED OR EASED. CORNERS OF SIGNS SHALL HAVE A MINIMUM RADIUS OF 1/8 INCH (3.2MM).

LOCATE RESTROOM SIGNAGE AS REQUIRED BY LOCAL CODE

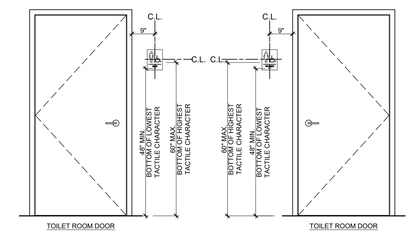

TOILET ROOM DOOR

TOILET ROOM DOOR

SIGNAGE — 1/2" = 1'-0" — G

TOILET RM ACCESSORY SCHEDULE — C

DRINKING FOUNTAIN CANE APRON: QASIS CANE APRON MODEL #036174-001 OR APPROVED EQUAL. VERIFY REQUIREMENTS WITH LOCAL CODE OR ORDINANCE

30"x48" MINIMUM CLEAR FLOOR SPACE CENTERED UNDER LOW DRINKING FOUNTAIN UNIT.

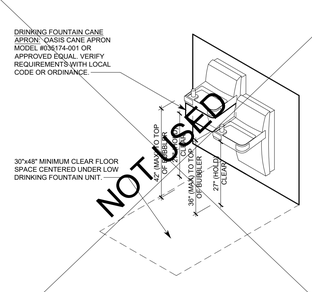

HI / LO ISOMETRIC — N.T.S. — U

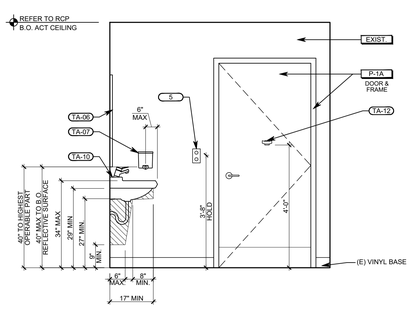

TOILET ROOM ELEVATION — 1/2" = 1'-0" — P

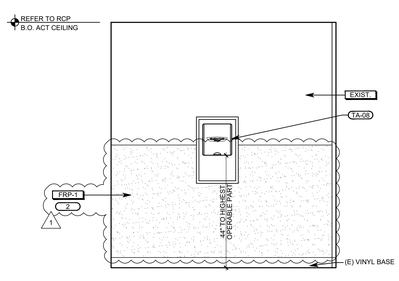

TOILET ROOM ELEVATION — 1/2" = 1'-0" — K

FLUSH HANDLE OF WATER CLOSET SHALL BE LOCATED ON APPROACH SIDE

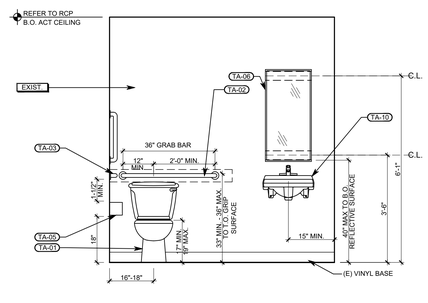

TOILET ROOM ELEVATION — 1/2" = 1'-0" — N

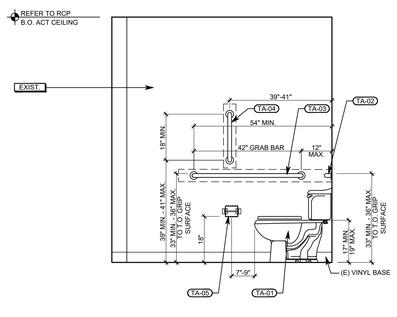

TOILET ROOM ELEVATION — 1/2" = 1'-0" — J

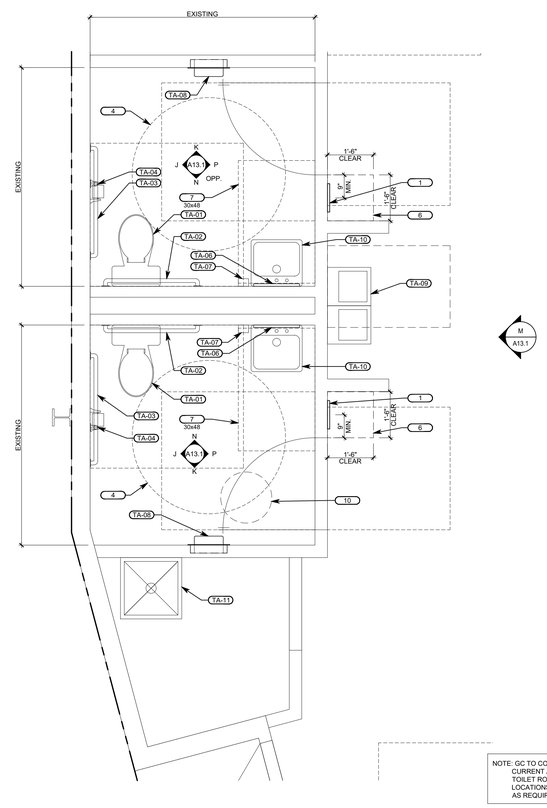

NOTE: GC TO CONFIRM RESTROOM FIXTURES ARE INSTALLED PER CURRENT ACCESSIBILITY REQUIREMENTS. REFER TO TOILET ROOM ELEVATION DETAILS FOR PROPER MOUNTING LOCATIONS. REMOVE, PLACE AND/OR RELOCATE EXISTING AS REQUIRED.

ENLARGED TOILET ROOM PLAN — 1/2" = 1'-0" — A

OWNER:

5A LANDS' END LANE
DODGEVILLE, WI 53595

ARCHITECT / ENGINEER:

SHREMSHOCK
Shremshock Architects, Inc.
7400 W. Campus Rd. Suite 150 New Albany, OH 43054
t: 614 545-4550 | f: 614 545-4555 | shremshock.com
Gerald S. Shremshock, Architect
Timothy J. Shremshock, Architect

©2019 THE ARCHITECT / ENGINEER ASSUMES NO RESPONSIBILITY FOR THE USE OF THESE PLANS FOR ANY PROJECT OTHER THAN SPECIFICALLY AUTHORIZED BY THEM AND SIGNED AND SEALED FOR SUCH SPECIFIC LOCATION IN THE STATE, PROVINCE OR TERRITORY SHOWN ON THE SEAL. THIS BUILDING USE IS ONLY APPLICABLE IN AREAS MEETING THE STATED DESIGN CRITERIA.

LANDS' END

STORE NO:
TBD

PROJECT LOCATION:
CONGRESSIONAL PLAZA
1667 ROCKVILLE PIKE
SPACE #06
ROCKVILLE, MD 20852

DESIGN TYPE:
-

REVISIONS:

REQUIRED BY:		DATE
CLT	CLIENT, LANDLORD & B.D. COMMENTS	07/19/2019

* INDICATES NO REVISION TO THIS SHEET

Professional Certification
I certify that these documents were prepared or approved by me, and that I am a duly licensed architect under the laws of the State of Maryland license number 17246, expiration date February 28, 2021.

TOILET ROOM PLAN, ELEVATION & DETAILS

DRAWN BY: JAW CHECKED BY: BRW/ELM/RHW

DATE ISSUED: 06/07/2019
PROJECT NO: 190148

DRAWING NO:
A13.1

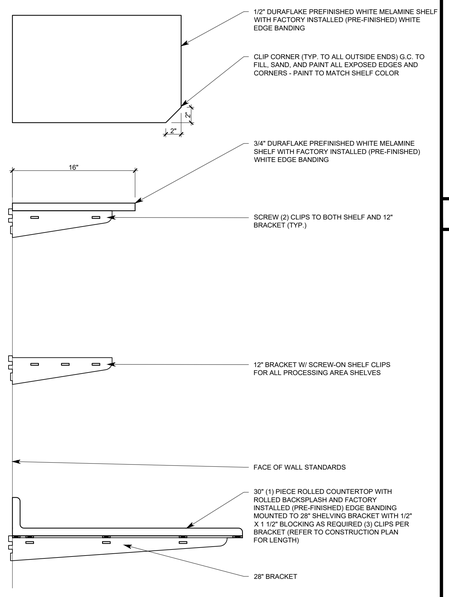

SHELF & BRACKET INSTALLATION | 1 1/2" = 1'-0" - | V

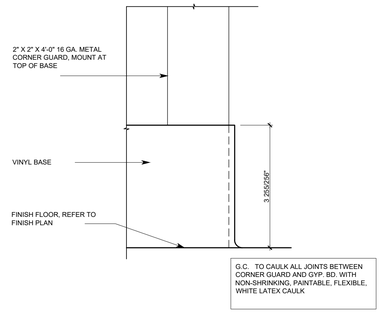

CORNER GUARD @ VINYL BASE DET. | N.T.S. - | S

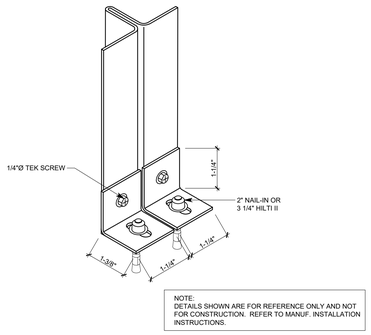

SHELVING ANCHORAGE DETAIL | N.T.S. - | M

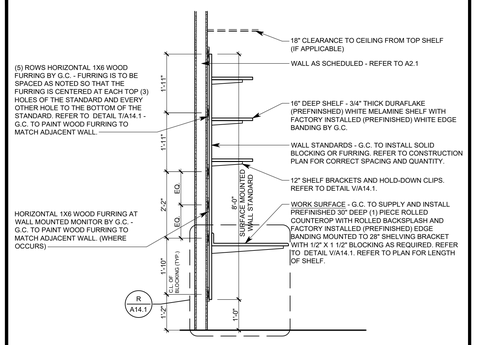

SHELVING SECTION | 1/2" = 1'-0" - | H

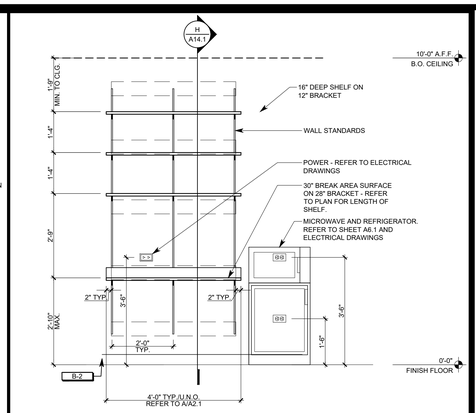

BREAK COUNTER ELEVATION | 1/2" = 1'-0" - | D

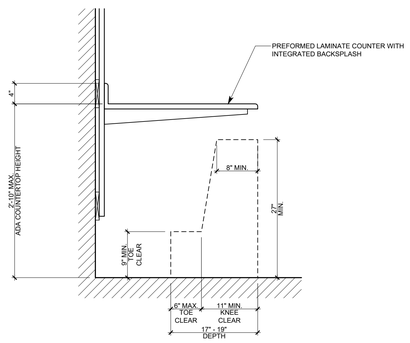

BREAK AREA LOW COUNTER DETAIL | 1" = 1'-0" - | R

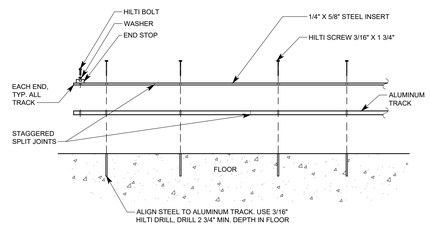

TRACK ANCHORAGE DETAIL | N.T.S. - | L

UPON COMPLETION OF PROJECT, G.C. PROVIDE A COMPLETE AS-BUILT SET OF DRAWINGS FOR THE COMPLETED STORE (ARCHITECTURAL, MECHANICAL AND ELECTRICAL) AND PLACE DRAWINGS INTO THE PLAN TUBE HOLDER

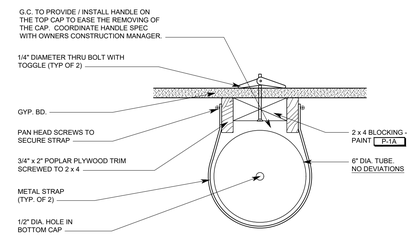

SECTION THRU TUBE 2

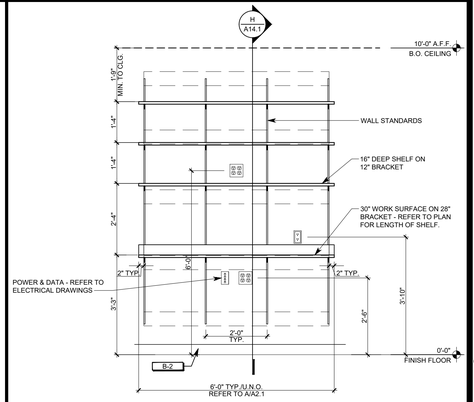

RECEIVING ELEVATION | 1/2" = 1'-0" - | C

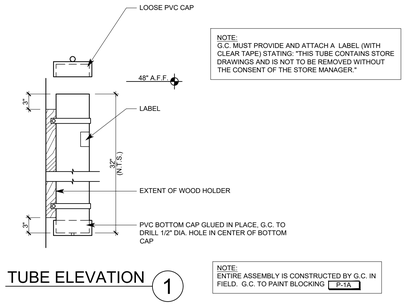

NOTE:
G.C. MUST PROVIDE AND ATTACH A LABEL (WITH CLEAR TAPE) STATING: "THIS TUBE CONTAINS STORE DRAWINGS AND IS NOT TO BE REMOVED WITHOUT THE CONSENT OF THE STORE MANAGER."

TUBE ELEVATION 1

NOTE:
ENTIRE ASSEMBLY IS CONSTRUCTED BY G.C. IN FIELD. G.C. TO PAINT BLOCKING P-TA.

DRAWING TUBE DETAIL | 1" = 1'-0" - | F

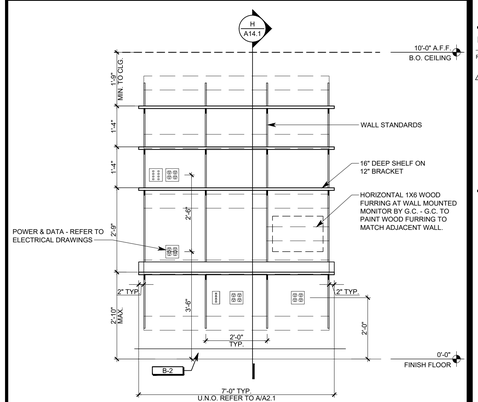

OFFICE ELEVATION | 1/2" = 1'-0" - | B

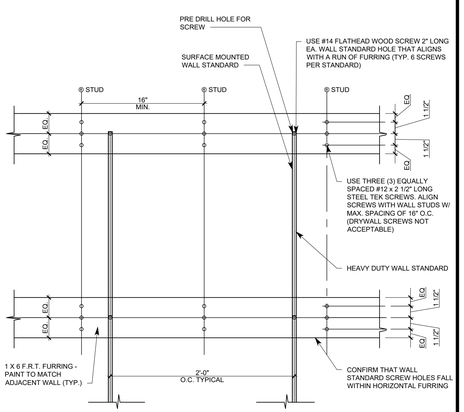

ELEVATION @ WOOD FURRING

SINK SCREWS FLUSH WITH BUT NOT LOWER THAN THE SURFACE OF THE FURRING. INSTALL WASHERS AT SCREWS WHERE FURRING IS UNUSUALLY SOFT.

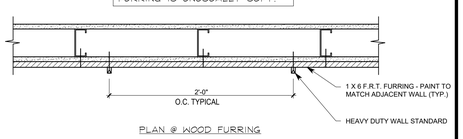

PLAN @ WOOD FURRING

FURRING AND WALL STUD DETAIL | 1 1/2" = 1'-0" - | T

REFER TO L/A14.1 FOR ANCHORING DETAILS

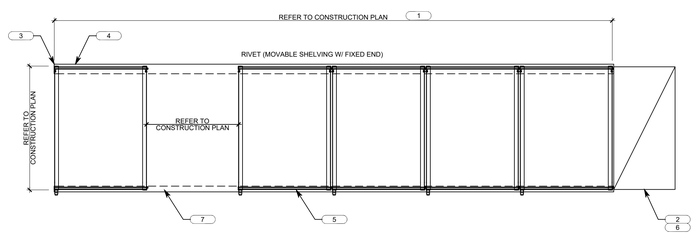

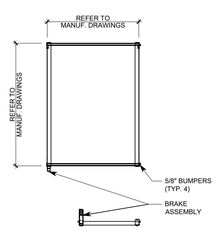

MOBILE SHELVING CARRIAGE

1. THE MAX. NUMBER OF BASES PER MODULE IS 6. 7 OR MORE WILL REQUIRE 2 AISLES AND 2 SETS OF STOPS.
2. USE THE DOUBLE FACE FIXED SHELF (RIVET RACK) OR 24" DEEP SHELF (RIVET RACK) AT THE END.
3. ALLOW 2" SPACE BETWEEN THE MOVABLE SYSTEM AND THE WALL, COLUMN, OR OUTERMOST OBSTRUCTION.
4. INSTALL ANTI-TIP TRACK PER MANUFACTURER'S GUIDELINES. LOCATE AT CENTER FOR DOUBLE ROW UNITS.
5. INSTALL CROSSBRACING ON ALL MOVABLE UNITS PER MANUF. INSTALLATION INSTRUCTIONS.
6. RIVETED FIXED UNITS. ATTACH TO FLOOR ON ALL FOUR CORNERS PER MANUFACTURER INSTALLATION INSTRUCTIONS. ATTACH TO WALL ONLY IF IT INTERFERES WITH ANTI-TIP BARS.
7. "V" TRACK CUT TO LENGTH AS REQUIRED.

FREESTANDING SHELVES ANCHOR EACH POST TO THE FLOOR WITH 1/4" ANCHOR

NOTE:
DETAILS SHOWN ARE FOR REFERENCE ONLY AND NOT FOR CONSTRUCTION. REFER TO MANUF. INSTALLATION INSTRUCTIONS.

MOBILE SHELVING | 1/2" = 1'-0" - | J

1. DESK
2. 16" DEEP MELAMINE SHELVING ABOVE

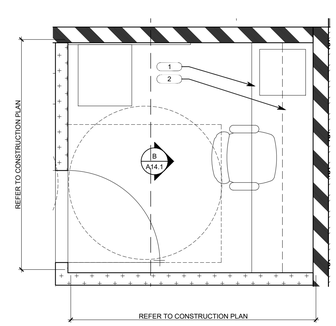

ENLARGED OFFICE PLAN | 1/2" = 1'-0" - | A

OWNER:

5A LANDS' END LANE
DODGEVILLE, WI 53595

ARCHITECT / ENGINEER:

SHREMSHOCK
Shremshock Architects, Inc.
7400 W. Campus Rd. Suite 150 New Albany, OH 43054
t: 614 545-4550 | f: 614 545-4555 | shremshock.com
Gerald S. Shremshock, Architect
Timothy J. Shremshock, Architect

©2019 THE ARCHITECT / ENGINEER ASSUMES NO RESPONSIBILITY FOR THE USE OF THESE PLANS FOR ANY PROJECT OTHER THAN SPECIFICALLY AUTHORIZED BY THEM AND SIGNED AND SEALED FOR SUCH SPECIFIC LOCATION IN THE STATE, PROVINCE OR TERRITORY SHOWN ON THE SEAL. THIS BUILDING USE IS ONLY APPLICABLE IN AREAS MEETING THE STATED DESIGN CRITERIA.

LANDS' END

STORE NO:
TBD

PROJECT LOCATION:
CONGRESSIONAL PLAZA
1667 ROCKVILLE PIKE
SPACE #06
ROCKVILLE, MD 20852

DESIGN TYPE:
-

REVISIONS:

REQUIRED BY:		DATE
1	CLIENT, LANDLORD & B.D. COMMENTS	07/19/2019

* INDICATES NO REVISION TO THIS SHEET

Professional Certification

I certify that these documents were prepared or approved by me, and that I am a duly licensed architect under the laws of State of Maryland license number 17246, expiration date February 28, 2021.

STOCKROOM DETAILS

DRAWN BY: JAW CHECKED BY: BRW/EL/MR/HW

DATE ISSUED: 06/07/2019
PROJECT NO: 190148
DRAWING NO:
A14.1

DIVISION 01 - GENERAL REQUIREMENTS

A. CONSTRUCTION DOCUMENTS

1. DRAWINGS AND SPECIFICATIONS ARE INTENDED TO BE COMPLIMENTARY. SPECIFIC INFORMATION MAY BE FOUND IN EITHER OR BOTH.
2. THE TERM 'OWNER' AS STATED IN THE FOLLOWING SPECIFICATIONS AND CONSTRUCTION DOCUMENTS, REFERS TO THE TENANT OF THIS SPACE ONLY AND DOES NOT REFER TO THE LANDLORD OF THE PREMISES.
3. ANY DISCREPANCIES, ERRORS OR OMISSIONS DISCOVERED IN THE CONTRACT DOCUMENTS BY THE CONTRACTOR SHALL BE BROUGHT TO THE ATTENTION OF OWNER BEFORE PROCEEDING WITH RELATED WORK; OTHERWISE, THE CORRECTION OF SUCH ITEMS IS THE RESPONSIBILITY OF THE CONTRACTOR.
4. APPROVED VARIANCES TO THE PLANS AND SPECIFICATIONS ON ONE PROJECT SHALL NOT CONSTITUTE AN APPROVAL OF LIKE VARIANCES ON SUBSEQUENT PROJECTS.

B. OWNER DIRECTIVES

1. THE CONTRACTOR SHALL FURNISH FULL TIME CONTINUOUS SUPERVISION. THE PROJECT SUPERINTENDENT SHALL REMAIN ON SITE UNTIL AFTER STORE IS OPEN
2. SUSPENSION OF ALL CEILING AND OVERHEAD FRAMING IS TO BE FROM STRUCTURAL MALL BEAMS AND TOP CHORD OF TRUSSES ONLY, NOT FROM MALL DECK.
3. GENERAL CONTRACTOR IS RESPONSIBLE FOR INSTALLATION OF REQUIRED BLOCKING NECESSARY FOR SUPPORT OF ALL ITEMS IN STORE. REVIEW DRAWINGS THOROUGHLY.
4. ALL OWNER-FURNISHED MATERIALS ARE FURNISHED TAILGATE DELIVERY ONLY. THE CONTRACTOR IS RESPONSIBLE TO UNLOAD, EXAMINE, AND TRANSPORT MATERIALS FROM THE POINT OF OFF-LOAD TO THE JOBSITE OR STORAGE AREA AS APPLICABLE. MATERIALS WILL BE DELIVERED TO THE CLOSEST AVAILABLE TRUCK DOCK OR OTHER LOCATION AS DIRECTED BY THE LANDLORD.
5. THE CONTRACTOR IS RESPONSIBLE FOR DAMAGE, LOSS, THEFT, OR DESTRUCTION OF ALL OWNER-FURNISHED MATERIALS. THE CONTRACTOR WILL BE BACK-CHARGED THE FULL COST OF REPLACEMENT MATERIALS INCLUDING FREIGHT CHARGES, IF ITEMS ARE DAMAGED OR LOST WHILE UNDER CARE OF CONTRACTOR.
6. THE GENERAL CONTRACTOR IS RESPONSIBLE FOR THE COORDINATION OF EACH TRADE WITH OTHER TRADES. CONTRACTORS SHALL NOT BE ENTITLED TO ADDITIONAL COMPENSATION FOR CONFLICTS WHICH RESULT FROM LACK OF COORDINATION OF THE INVOLVED TRADES.
7. THE GENERAL CONTRACTOR SHALL EMPLOY SUBCONTRACTORS WHO ARE EXPERIENCED AND WHO EMPLOY EXPERIENCED TRADESMEN.
8. THE GENERAL CONTRACTOR SHALL NOT EMPLOY NOISY CONSTRUCTION TECHNIQUES OR EQUIPMENT DURING MALL OR STORE HOURS.
9. THE CONTRACTORS SHALL WORK IN COOPERATION AND HARMONY WITH THE LANDLORD AND THE ADJACENT TENANTS IN SCHEDULING WORK IN ORDER TO CAUSE THE LEAST INCONVENIENCE TO PERSONNEL AND PROPERTY. IF SECURITY IS REQUIRED WHILE WORKING IN ADJACENT TENANTS SPACE, THIS COST WILL BE THE SOLE RESPONSIBILITY OF THE CONTRACTOR.
10. THE CONTRACTOR SHALL NOT UTILIZE GAS-OPERATED EQUIPMENT IN OCCUPIED SHOPPING CENTERS. THE CONTRACTOR SHALL WORK IN HARMONY WITH THE LANDLORD'S REQUIREMENTS RELATING TO NOISE ABATEMENT AND SAFETY.
11. THE CONTRACTOR SHALL FURNISH DUMPSTERS AS REQUIRED FOR THE EXCLUSIVE USE BY STORE PERSONNEL DURING MERCHANDISING. THE CONTRACTOR SHALL INCLUDE IN THE BID A MINIMUM OF ONE 40-YARD DUMPSTER OR THE EQUIVALENT. IF THE SALES AREA EXCEEDS 8,000 SQUARE FEET, THE CONTRACTOR SHALL INCLUDE ONE ADDITIONAL DUMPSTER.
12. GENERAL CONTRACTOR WILL BE RESPONSIBLE FOR THE COST OF ANY AND ALL OFF-SITE STORAGE OF OWNER SUPPLIED MATERIALS.

C. LAYOUT OF WORK

1. EXERCISE PROPER PRECAUTION TO VERIFY ALL EXISTING CONDITIONS AND LAYOUT OF WORK. CONTRACTOR TO NOTIFY OWNER'S CONSTRUCTION MANAGER OF ANY DISCREPANCIES IMMEDIATELY. CONTRACTOR IS RESPONSIBLE FOR ANY ERROR RESULTING FROM FAILURE TO EXERCISE SUCH PRECAUTION. SUCH ERROR WILL NOT BE CONSIDERED SUBSEQUENTLY AS A BASIS FOR EXTRA COMPENSATION.
2. SHOULD A CONTRACTOR FIND DISCREPANCIES IN, OR OMISSIONS FROM THE DRAWINGS OR SPECIFICATIONS, OR SHOULD HE BE IN DOUBT AS TO THEIR MEANING, HE SHALL AT ONCE NOTIFY THE OWNER'S CONSTRUCTION MANAGER.
3. GENERAL CONTRACTOR IS RESPONSIBLE FOR SUPPLYING OR RENTING ALL TOOLS, WELDERS, GENERATORS, ETC. FOR COMPLETING PROJECT.

D. CODES AND STANDARDS

1. ALL WORK, MATERIALS AND INSTALLATION SHALL BE IN STRICT ACCORDANCE WITH ALL ORDINANCES, STATE AND LOCAL BUILDING CODES, LATEST EDITION, AND FOLLOW APPLICABLE LANDLORD REQUIREMENTS.
2. DESIGN LOADS: LOADS AND CODE RESTRICTIONS FOR ALL DESIGN CONSIDERATIONS SHALL CONFORM TO THE LOCAL AND STATE CODES, AND ALL GOVERNING CODES.

E. QUALITY CONTROL:

1. MAINTAIN QUALITY CONTROL OVER SUPPLIERS, MANUFACTURERS, PRODUCTS, SERVICES, SITE CONDITIONS AND WORKMANSHIP TO PRODUCE WORK OF SPECIFIED QUALITY.
2. REQUIRE MANUFACTURER OR SUPPLIER TO HAVE QUALIFIED PERSONNEL PROVIDE ON-SITE OBSERVATIONS AND RECOMMENDATIONS.
3. TESTING SHALL BE BY AN APPROVED TESTING LABORATORY AS REQUIRED BY SPECIFICATIONS AND APPLICABLE CODES.
4. REPLACE WORK NOT CONFORMING TO SPECIFIED REQUIREMENTS.

F. TEMPORARY FACILITIES AND CONTROLS:

1. PROVIDE TEMPORARY CONSTRUCTION FACILITIES AND TEMPORARY CONTROLS AS NOTED IN THE CONTRACT DOCUMENTS AND AS REQUIRED TO COMPLETE THE PROJECT IN ACCORDANCE WITH THE CONTRACT DOCUMENTS AND TO CONFORM TO REQUIREMENTS OF APPLICABLE AUTHORITIES.

G. PRODUCT REQUIREMENTS:

1. PROVIDE MATERIALS AND PRODUCTS BY MANUFACTURERS INDICATED IN THE CONTRACT DOCUMENTS.
2. REQUESTS FOR SUBSTITUTIONS WILL ONLY BE PERMITTED IF SUBMITTED IN WRITING AND ARE APPROVED BY THE OWNER AND ARCHITECT.

H. EXECUTION AND CLOSEOUT REQUIREMENTS:

1. CUT AND FIT COMPONENTS AS REQUIRED. PATCH DISTURBED AREAS TO MATCH ADJACENT MATERIALS. REFINISH ENTIRE SURFACES AS NECESSARY TO PROVIDE EVEN FINISH TO MATCH ADJACENT FINISH. REFINISH ENTIRE UNIT, IF NECESSARY.
2. PERFORM FINAL CLEANING OF ALL SURFACES EXPOSED TO VIEW FOR BOTH INTERIOR AND EXTERIOR ELEMENTS, AS APPLICABLE. REMOVE TEMPORARY LABELS, STAINS AND FOREIGN SUBSTANCES; VACUUM CARPETED AND SOFT SURFACES; CLEAN DUCTS AND CLEAN SITE.
3. AT SUBSTANTIAL COMPLETION, PROVIDE DOCUMENTATION STATING WORK HAS BEEN SUBSTANTIALLY COMPLETED. WHERE OWNER REQUIRES USE OF SPACE PRIOR TO FINAL COMPLETION, PROVIDE LIST OF ITEMS TO BE COM;ETED. OWNER'S PROJECT MANAGER WILL SUPPLEMENT LIST WITH ANY ITEMS DEEMED TO BE INCOMPLETE OR UNACCEPTABLE.
4. PROVIDE WRITTEN CERTIFICATION OF FINAL COMPLETION INDICATING WORK IS IN COMPLIANCE WITH CONTRACT DOCUMENTS, SYSTEMS HAVE BEEN TESTED AND ARE OPERATIONAL AND WORK IS READY FOR INSPECTION.
5. PROVIDE RECORD DOCUMENTS, MATERIAL AND FINISH DATA, OPERATION AND INSTRUCTION MANUALS, WARRANTIES AND BONDS AT COMPLETION.
6. PROVIDE WARRANTIES, SIGNED BY CONTRACTOR AND MANUFACTURER IN A FORM APPROVED BY OWNER.

I. GENERAL CONDITIONS

1. THE AMERICAN INSTITUTE OF ARCHITECTS DOCUMENT A201 "GENERAL CONDITIONS OF THE CONTRACTOR FOR CONSTRUCTION" IS A PART OF THE CONTRACT DOCUMENTS, IF WRITTEN IN FULL WITHIN.

DIVISION 02 - SELECTIVE DEMOLITION

A. DEMOLITION AND SPACE PREPARATION

1. WITHIN FIVE (5) DAYS OF COMMENCEMENT OF CONSTRUCTION, OR WITHIN TWO (2) DAYS FOLLOWING COMPLETION OF DEMOLITION, THE CONTRACTOR SHALL CAREFULLY EXAMINE THE SITE AND REPORT TO THE OWNER'S CONSTRUCTION MANAGER ANY DISCREPANCIES IN THE LEASE-HOLD DIMENSIONS OR CONFLICTS BETWEEN THE PHYSICAL SPACE AND THE INTENT OF THE WORKING DRAWINGS (G.C. TO PAY SPECIAL ATTENTION TO POP-UP CEILING AREAS, CEILING HEIGHTS, AND AVAILABLE HEIGHT FOR ROLL-UP ENTRANCE GRILLES).
2. GENERAL CONTRACTOR IS TO CONTACT LANDLORD'S ON-SITE MANAGER PRIOR TO ANY DEMOLITION WORK TO DETERMINE THE AVAILABILITY OF DUMPSTER PLACEMENT, NOISE AND DUST ABATEMENT REQUIREMENTS, ETC.
3. GENERAL CONTRACTOR IS TO ARRANGE WITH THE LANDLORD A CONVENIENT TIME TO PERFORM DEMOLITION WORK AND INSTALL TEMPORARY PROTECTED MEANS OF EGRESS FROM REQUIRED EXITS, INCLUDING TEMPORARY LIGHTING AND SAFETY DEVICES, ALL IN ACCORDANCE WITH GOVERNING STATE AND LOCAL CODE AND LANDLORD REQUIREMENTS.
4. GENERAL CONTRACTOR TO ERECT BARRICADE AT STOREFRONT PER CONTRACT DOCUMENTS AND PER LANDLORD'S SPECIFICATIONS. GENERAL CONTRACTOR TO INSTALL OWNER SUPPLIED BARRICADE SIGN. (IF PROVIDED)
5. THE GENERAL CONTRACTOR SHALL REMOVE, REPAIR, RESTORE AND REPLACE COMPONENTS WHERE NECESSARY OR INDICATED ON THE DRAWINGS OR AS REQUIRED. CUT ALL NECESSARY OPENINGS FOR ANY REQUIRED PURPOSE AND REPAIR, WHERE NECESSARY, AFTER CUTTING. INSOFAR AS POSSIBLE, ALL PROTRUSIONS, MARKS, CRACKS OR OTHER EVIDENCE OF A DEFICIENT OR DAMAGED CONDITION SHALL BE ELIMINATED UNLESS SPECIFICALLY NOTED OTHERWISE. ANY PARTS WHICH ARE SPLIT, CRACKED, CHIPPED, SPALLED, BROKEN, MISSING, OR OUT OF LINE OR ADJUSTMENT, MECHANICALLY OR STRUCTURALLY UNSAFE OR UNSOUND, BENT, TORN, OR OTHERWISE DEFICIENT OR INJURED IN ANY MANNER, SHALL BE REMOVED, REPLACED, RESTORED, OR SATISFACTORILY REPAIRED AS DIRECTED BY THE OWNER'S CONSTRUCTION MANAGER.
6. GENERAL CONTRACTOR IS RESPONSIBLE FOR THE REMOVAL AND DISPOSAL OF ALL LEASE-HOLD IMPROVEMENTS INCLUDING, BUT NOT LIMITED TO: INTERIOR WALLS, CEILINGS, FLOOR COVERINGS (ALL ADHESIVES), PLATFORMS, STORE-FRONTS, ETC. (UNLESS INDICATED OTHERWISE ON ARCHITECTURAL DRAWINGS). ALL EXISTING UNUSED MECHANICAL, ELECTRICAL AND/OR PLUMBING FIXTURES AND EQUIPMENT, INCLUDING ABANDONED ROOFTOP HVAC EQUIPMENT AND CURBS (UNLESS INDICATED OTHERWISE ON MECHANICAL AND ELECTRICAL DRAWINGS) AND/OR SKYLIGHTS ARE TO BE REMOVED AND THE ROOF PATCHED PER ITEM #12 BELOW: CAPPING IS NOT PERMITTED! MATCH EXISTING MATERIALS AND MAINTAIN EXISTING ROOF WARRANTIES.
7. GENERAL CONTRACTOR IS RESPONSIBLE FOR THE REMOVAL AND DISPOSAL OF ALL LOOSE ITEMS SUCH AS, BUT NOT LIMITED TO: TRADE FIXTURES, MISCELLANEOUS DECORATIONS, KITCHEN EQUIPMENT, ETC.
8. ALL ABANDONED ELECTRICAL/TELEPHONE CONDUIT, PLUMBING LINES AND MECHANICAL DUCTWORK MUST BE REMOVED TO THE POINT OF ORIGIN.
9. INFORM THE LANDLORD'S ON-SITE MANAGER OF ANY UTILITY NEEDING TO BE DISCONNECTED OR CAPPED, PRIOR TO DOING SO.
10. GENERAL CONTRACTOR IS TO EXERCISE EXTREME CARE DURING DEMOLITION SO AS NOT TO DAMAGE OR DISRUPT UTILITIES OR SPRINKLER LINES WHICH MIGHT PASS THROUGH THIS SPACE TO SERVICE OTHER MALL SPACES OR OTHER TENANTS (G.C. WILL BEAR SOLE RESPONSIBILITY FOR ANY SUCH DAMAGE OR DISRUPTION).
11. REMOVE ALL EXISTING FLOOR FINISHES AND PREPARE CONCRETE SLAB FOR NEW FLOOR FINISHES. PATCH, REPAIR AND LEVEL EXISTING SLAB. INFORM OWNER OF ANY IRREGULARITIES IN EXISTING SLAB IMMEDIATELY.
12. GENERAL CONTRACTOR IS RESPONSIBLE TO PATCH AND/OR REPAIR EXISTING FLOOR SLAB, TENANT SEPARATION WALLS AND ROOF DECK AFTER COMPLETION OF DEMOLITION AND PRIOR TO COMMENCEMENT OF NEW CONSTRUCTION (G.C. MUST CONTACT LANDLORD PRIOR TO ANY ROOF WORK AND COORDINATE ACCORDINGLY).
13. GENERAL CONTRACTOR IS RESPONSIBLE FOR ALL DEMOLITION WORK AND MUST INFORM OWNER'S CONSTRUCTION MANAGER OF THE EXTENT OF SUCH WORK, PRIOR TO BIDDING.
14. GENERAL CONTRACTOR IS TO DETERMINE HIS RESPONSIBILITY FOR THE FLOOR SLAB AND TENANT SEPARATION WALL INSTALLATION OR MODIFICATIONS WITH LANDLORD AND OWNER'S CONSTRUCTION MANAGER TO MEET ALL TENANT IMPROVEMENT CRITERIA AND RESPONSIBILITY SET BY THE LANDLORD OR OWNER. GENERAL CONTRACTOR IS TO VERIFY THE ACTUAL CONDITION OF THE PERIMETER TENANT SEPARATION WALLS AND/OR FLOOR SLAB PRIOR TO BIDDING. BID IS TO INCLUDE ALL WORK REQUIRED.

B. SITE SURVEY:

1. WITHIN 24 HOURS AFTER DEMOLITION COMPLETION PROVIDE COMPLETED SITE SURVEY DOCUMENTATION. IF NO SITE SURVEY DOCUMENT WAS INCLUDED IN CONTRACT DOCUMENT SET, G.C. SHALL ADHERE TO REQUIREMENT LISTED IN PARAGRAPH 2, AS A MINIMUM.
2. IMMEDIATELY UPON COMPLETION OF DEMOLITION AND PRIOR TO STARTING OF CONSTRUCTION JOB SUPERVISOR TO VERIFY AND ADVISE OWNER'S CONSTRUCTION MANAGER.
   a. OVERALL WIDTH (FACE OF GYPSUM BOARD ON TENANT SEPARATION WALL TO FACE OF GYPSUM BOARD ON TENANT SEPARATION WALL).
   b. OVERALL LENGTH (LEASE LINE TO INNER-FACE OF GYPSUM BOARD ON REAR WALL.)
   c. ANY AND ALL COLUMN LOCATIONS - FREE STANDING OR PROJECTING.
   d. AVAILABLE CLEAR HEIGHT FOR GRILLE AND CEILING AS DIMENSIONED ON DRAWINGS.

DIVISION 03 - CONCRETE

A. IF NOT OTHERWISE INDICATED ON THE DRAWINGS, CONCRETE SHALL HAVE A MINIMUM COMPRESSIVE STRENGTH OF 3500 PSI AT 28 DAYS, WITH A WATER CEMENT RATIO = .50 (MAXIMUM). CONCRETE EXPOSED TO WEATHER SHALL BE AIR-ENTRAINED AT 6% ± 1.5%.
B. ALL REINFORCING STEEL SHALL BE NEW DOMESTIC DEFORMED BILLET STEEL CONFIRMING TO ASTM A-615 GRADE 60.
C. WELDED WIRE FABRIC SHALL CONFORM TO ASTM A-185 DELIVERED IN FLAT SHEETS.
D. ALL CONCRETE WORK SHALL BE IN ACCORDANCE WITH "THE BUILDING CODE REQUIREMENTS FOR REINFORCED CONCRETE" ACI 318-05.
E. ALL REINFORCING DETAILS SHALL CONFORM TO "THE MANUAL OF STANDARD PRACTICE FOR DETAILING REINFORCED CONCRETE STRUCTURES" ACI 315-94, UNLESS DETAILED OTHERWISE ON THE STRUCTURAL DRAWINGS.
F. CONTRACTOR SHALL VERIFY LOCATIONS OF ALL OPENINGS, SLEEVES, ANCHOR BOLTS, INSERTS, ETC., AS REQUIRED BY OTHER TRADES BEFORE CONCRETE IS PLACED.
G. CONTRACTOR SHALL PROVIDE SPACERS, CHAIRS, BOLSTERS, ETC., NECESSARY TO SUPPORT REINFORCING STEEL. CHAIRS WHICH BEAR ON EXPOSED CONCRETE SURFACES SHALL HAVE ENDS WHICH ARE PLASTIC TIPPED OR STAINLESS STEEL. STAIRS WHICH BEAR ON EXPOSED CONCRETE SURFACES TO RECEIVE SANDBLAST FINISH SHALL BE STAINLESS STEEL.
H. MINIMUM CONCRETE COVER SHALL BE PROVIDED FOR REINFORCEMENT PER ACI STANDARDS.
I. THE CONTRACTOR IS RESPONSIBLE TO DETERMINE IF A NEW CONCRETE SLAB IS REQUIRED IN ALL OR PART OF THE LEASED SPACE. SUCH FLOOR SLAB SHALL BE INSTALLED IN ACCORDANCE WITH THE CONTRACT DOCUMENTS, LOCAL CODES, AND COMMON STANDARDS OF PRACTICE TO THE LOCALITY OF THE PROJECT OR WHICHEVER IS STRICTER. IN THE ABSENCE OF THE ABOVE, THE CONTRACTOR SHALL CONTACT THE OWNER FOR DIRECTION. MINIMUM REQUIREMENTS FOR THE FLOOR SLABS ON GRADE SHALL BE FOUR INCH THICK CONCRETE SLAB REINFORCED WITH 6"x 6" W.W.F.; CONCRETE SHALL BE PLACED OVER COMPACTED SAND/AGGREGATE BASE. PROVIDE 10 MIL VAPOR RETARDER LOCATED IN CENTER OF THE COMPACTED SAND/AGGRETATE BASE. THE SOIL SHALL BE INSECT TREATED IF CUSTOMARY TO THE LOCALITY OR AS REQUIRED BY LANDLORD.
J. PROVIDE CONCRETE RESURFACING AND REHABILITATION FOR EXISTING CONCRETE SLABS AS REQUIRED FOR INSTALLATION OF FLOOR FINISHES AS FOLLOWS:
   1. EXISTING CONCRETE SURFACES SHALL BE IMPROVED AND/OR REPAIRED TO PROVIDE A SUITABLE SURFACE FOR INSTALLATION OF ALL FLOOR FINISH MATERIALS AND TO COMPLY WITH ALL PROJECT AND /OR FIXTURE REQUIREMENTS.
   2. FILL EXISTING STATIC SUBSTRATE CRACKS WITH CRACK ISOLATION MEMBRANE COMPLYING WITH ANSI 118.12 (FOR TREATMENT ALONG CRACKS ONLY; MUST BE INSTALLED OVER ANY REQUIRED SELF-LEVELING UNDERLAYMENT.)
      a. MAPEI MAPELASTIC AQUADEFENCE
      b. LATICRETE INTERNATIONAL HYDROBAN
   3. PROVIDE PRE-BLENDED POLYMER-MODIFIED CEMENTITIOUS FAST SETTING HIGH FLOW PATCHING MORTAR, FOR PATCHING, RAMPING AND SMALL FILL AREAS, SUITABLE FROM FEATHER EDGE TO 3 INCH (76MM) APPLICATION IN CONFINED AREAS AS A WEAR SURFACE.
      a. MAPEI MAPECEM QUICKPATCH
      b. LATICRETE NXT PATCH
   4. LARGE FILL AREAS AND LEVELING: PROVIDE POURABLE CEMENTITIOUS, HIGH-STRNGTH, FAST-SETTING, NON-SHRINK, SELF-LEVELING UNDERLAYMENT ACHIEVING A MINIMUM OF 4000 PSI COMPRESSIVE STRENGTH AT 28 DAYS, COMPLYING WITH ASTM C349 AND SUITABLE FROM 1/8 INCH TO 1 INCH (3MM TO 25MM) FOR LARGE FILL AREAS AND LEVELING.
      a. MAPEI ULTRAPLAN 1 PLUS IN CONJUNCTION WITH PRIMER T (SELF-LEVELING PRIMER)
      b. LATICRETE NXT LEVEL PLUS IN CONJUNCTION WITH LATICRETE NXT PRIMER
      c. ARDEX ERM - EXTERIOR RAMP MORTAR
   5. SHOT BLAST AFFECTED SLAB AREA PRIOR TO INSTALLATION OF ANY SELF-LEVELING UNDERLAYMENT TO ACHIEVE A SURFACE PROFILE BETWEEN CSP-3 AND CSP-6 AS PER ICRI STANDARDS.
K. UNLESS OTHERWISE INDICATED, ALL CONCRETE FLOORS ARE TO BE FINISHED WITH A CLEAR SEALER OF TYPE INDICATED ON FINISH SCHEDULE IN DRAWINGS.
   APPLY IN STRICT ACCORDANCE WITH MANUFACTURER'S INSTRUCTIONS.

DIVISION 4 - MASONRY

A. THE CONTRACTOR SHALL ACCOMPLISH ANY MISCELLANEOUS MASONRY WORK INDICATED ON THE PLANS, OR NOT INDICATED ON THE PLANS YET INCIDENTAL TO THE ACCOMPLISHMENT OF OTHER WORK. WHERE APPLICABLE, MASONRY WORK SHALL MATCH EXISTING WORK. NEW MASONRY WORK SHALL BE NEATLY TOOTHED INTO EXISTING MASONRY IF APPLICABLE.

DIVISION 5 - METALS

A. STRUCTURAL STEEL: REFER TO STRUCTURAL DRAWINGS (WHERE APPLICABLE).

B. METAL STUDS: GALVANIZED STEEL STUDS SIZED AS INDICATED ON DRAWINGS OR AS REQUIRED. INCLUDE ALL ACCESSORIES, SUCH AS BRIDGING, TRACK, ETC. PROVIDE ALL MISCELLANEOUS BOLTS, CLIPS, ANCHORS, ANGLES, BRACKETS, SLEEVES, FASTENERS, AND OTHER METAL ITEMS AS REQUIRED.
   1. COLD FORMED STEEL FRAMING SHALL CONFORM TO REQUIREMENTS OF THE LATEST EDITION OF ANSI "SPECIFICATION FOR DESIGN OF COLD-FORMED STEEL STRUCTURAL MEMBERS" AND WITH ASTM C955 AND C1007.
   2. STUDS SHALL BE INSTALLED SO THE ENDS ARE POSITIONED AGAINST THE INSIDE OF THE RUNNER TRACK WEB PRIOR TO FASTENING AND SHALL BE ATTACHED TO BOTH FLANGES OF THE UPPER AND LOWER RUNNER TRACKS.
   3. FOR VERTICAL STUDS WHERE THERE IS NO SHEATHING ATTACHED (SUCH AS ABOVE THE CEILING), OR WHERE SHEATHING IS ATTACHED TO ONLY ONE FACE, PROVIDE STANDARD BRIDGING AT 48" O.C. MAX. ATTACH PER MANUFACTURER'S SPECIFICATIONS AND AS DETAILED ON THE DRAWINGS.

C. DECORATIVE METALS: INSTALL DECORATIVE METAL SUCH AS BRAKE METAL PANELS, METAL BASE, TRIMS AND REGLETS AND OTHER PREFINISHED METAL, ETC. AS INDICATED ON DRAWINGS, PER MANUFACTURER'S RECOMMENDATIONS. INCLUDE ALL FASTENING AND ANCHORAGE DEVICES, CLIPS, CLOSURES AND CONNECTING ELEMENTS AS INDICATED AND AS REQUIRED FOR COMPLETE FINISHED INSTALLATION.

D. GARCY STUDS & STANDARDS: SUPPLIED BY OWNER AND INSTALLED BY G.C.
   1. PROVIDE ACCESSORIES AS REQUIRED FOR COMPLETE INSTALLATION

DIVISION 6 - CARPENTRY

A. PROVIDE NEW LUMBER, BEARING GRADE AND TRADEMARK OF ASSOCIATION UNDER WHICH IT WAS PRODUCED.
B. LAYOUT, CUT, FIT AND ERECT FRAMING FOR ROUGH AND FINISHED WORK. INSTALL BLOCKING, NAILERS, FURRING AND OTHER ROUGH AND FINISHED MATERIALS AS REQUIRED. BRACE, PLUMB LEVEL MEMBERS IN TRUE ALIGNMENT AND RIGIDLY SECURE IN PLACE WITH SUFFICIENT NAILS, SCREWS AND BOLTS AS NECESSARY.
C. USE FIRE RETARDANT LUMBER AND TRIM WHERE REQUIRED BY STATE OR LOCAL CODES, WHICH BEAR THE MANUFACTURER'S STAMP OF AUTHENTICITY.
D. PROVIDE PRESERVATIVE TREATED LUMBER AND TRIM WHERE EXPOSED TO THE EXTERIOR AND WHERE NOTED ON DRAWINGS.
E. FURNISH AND INSTALL ALL GROUNDS OR BLOCKING REQUIRED TO RECEIVE STORE FIXTURES.
F. FURNISH AND INSTALL ALL ROUGH HARDWARE, ANCHORS, BOLTS, ETC., AS REQUIRED FOR CARPENTRY WORK.
G. PROVIDE ARCHITECTURAL WOODWORK, CASEWORK AND COUNTERTOPS, PANELS, TRIMS, VENEERS, SHELVING AND ACCESSORIES AS INDICATED ON THE DRAWINGS AND AS REQUIRED FOR A COMPLETE FINISHED INSTALLATION.
H. CONFORM TO ARCHITECTURAL WOODWORK INSTITUTE (AWI) QUALITY STANDARDS; NOT LESS THAN CUSTOM GRADE WHERE GRADE IS NOT OTHERWISE INDICATED.
I. COMPLY WITH MANUFACTURER RECOMMENDATIONS AND REFERENCED STANDARDS FOR INSTALLATION.
J. EXTERIOR SHEATHING ; GLASS MAT FACED SHEATHING - DENSGLASS GOLD, 5/8" THICK OR AS DETAILED, COMPLYING WITH ASTM C1177.
K. CEMENTITIOUS FIBER-MAT REINFORCED SHEATHING: PROVIDE IN THICKNESS SHOWN AND WHERE INDICATED ON DRAWINGS.
   1. COMPLY WITH ASTM C1325 AND ANSI A118.9
   2. PRODUCTS BY U.S. GYPSUM CO., "DUROCK" BRAND OR APPROVED EQUAL.

L. CELLULOSE FIBER-REINFORCED SHEATHING: PROVIDE IN THICKNESS SHOWN AND WHERE INDICATED ON DRAWINGS.
   1. COMPLY WITH ASTM C1278/C1278M.
   2. PRODUCTS BY US GYPSUM CO. "FIBEROCK" SHEATHING WITH "AQUA-TOUGH" OR APPROVED EQUAL.

DIVISION 7 - THERMAL & MOISTURE PROTECTION

A. ROOFING/FLASHING:
   1. GENERAL CONTRACTOR TO CONTACT LANDLORD'S ON-SITE MANAGER FOR SPECIFICATIONS ON ROOF PATCHING OR NAME OF ROOFING CONTRACTOR TO CONTACT FOR REPAIRS. ALL ROOF REPAIR/PATCHES MUST BE PERFORMED IN STRICT ACCORDANCE WITH THE MANUFACTURER'S RECOMMENDATIONS FOR EACH MATERIAL WITHIN THE ROOF ASSEMBLY. MAINTAIN ROOF WARRANTIES WHERE SUCH WARRANTIES ARE PRESENT IN AN EXISTING ROOF ASSEMBLY.

B. INSULATION:
   GENERAL CONTRACTOR TO PROVIDE AND INSTALL RIGID AND/OR FULL BATT INSULATION AS INDICATED. PROVIDE BATT INSULATION WITH FOIL FACING OR SEPARATE 4 MIL POLYETHELENE (VISQUEEN) VAPOR RETARDER AT EXTERIOR WALLS AND CEILINGS AS REQUIRED BY LANDLORD AND CONSTRUCTION DRAWINGS.

C. JOINT SEALANTS:
   1. THROUGHOUT THE WORK, SEAL JOINTS WHERE SHOWN ON THE DRAWINGS AND ELSEWHERE AS REQUIRED TO PROVIDE A POSITIVE BARRIER AGAINST PASSAGE OF MOISTURE AND AIR. ALL JOINTS ARE TO BE SEALED, WHETHER SPECIFICALLY IDENTIFIED IN THIS SECTION OR NOT. APPROPRIATE MATERIALS SHALL BE USED. PROVIDE EXTERIOR AND INTERIOR JOINT SEALERS AS REQUIRED FOR A COMPLETE INSTALLATION.
   2. DO NOT USE ANY MATERIAL WHICH HAS EXPIRED.
   3. PROVIDE AND INSTALL ONLY MATERIALS WHICH ARE COMPATIBLE WITH EACH OTHER AND WITH THE RELATED JOINT SUBSTRATES.
   4. EXTERIOR NON-TRAFFIC JOINTS: GE/SILPRUF, DOW/790-795, PECORA/854, OR TREMCO/SPECTRUM 3 LOW MODULUS SILICONE SEALANT.
   5. TRAFFIC BEARING JOINTS: TREMCO/VULKEM 245, PECORA/NR-200 UREXPAN, OR SONNEBORN DIVISION CHEMREX/SL 2 MULTI-COMPONENT POLYURETHANE, SELF-LEVELING JOINT SEALER.
   6. MILDEW-RESISTANT SANITARY SEALANTS: GE/SCS 1702 SANITARY SEALANT, DOW/786 BATHTUB CAULK, PECORA/863 #345 WHITE, OR TREMCO/TREMSIL 200; PROVIDE AT INTERIOR AREAS WHERE SEALANT WILL BE EXPOSED TO WATER.
   7. GENERAL INTERIOR JOINT SEALER: PECORA/AC-20, SONNEBORN/SONOLAC, OR TREMCO/ULTREM 1500 ACRYLIC OR LATEX EMULSION.
   8. MISCELLANEOUS MATERIALS: PRIMERS, SEALERS, JOINT CLEANERS, BOND BREAKER TAPE, AND SEALANT BACKER RODS AS RECOMMENDED BY SEALANT MANUFACTURER FOR APPLICATIONS INDICATED.
   9. INSTALLATION: COMPLY WITH MANUFACTURER'S INSTRUCTIONS AND ASTM C1193.
   10. FIRE RATED SEALANT:
      a. ALL SLEEVES, OPENINGS, ETC. THROUGH FIRE RATED WALLS AND FLOORS SHALL BE FIRE SEALED WITH CALCIUM SILICATE, SILICONE "RTV" FOAM, "3M" FIRE RATED SEALANTS OR EQUAL BY HILTI AS REQUIRED TO COMPLY WITH THE APPLICABLE FIRE-RATED ASSEMBLY REQUIREMENTS.

D. FLASHING AND SHEET METAL:
   1. PROVIDE FLASHING AND SHEET METAL AS INDICATED ON THE DRAWINGS.
      a. CONFORM TO SMACNA ARCHITECTURAL SHEET METAL MANUAL REQUIREMENTS, FOR EACH RELATED CONDITION.
   2. ALLOW FOR MOVEMENT OF COMPONENTS WITHOUT CAUSING BUCKLING, FAILURE OF JOINT SEALS, UNDUE STRESS ON FASTENERS OR OTHER DETRIMENTAL EFFECTS, WHEN SUBJECT TO 1OO YEAR SEASONAL TEMPERATURE RANGES.
   3. FLASHING AND SHEET METAL: MATCH EXISTING, BUT NOT LESS THAN FOLLOWING
      a. GALVANIZED METAL FLASHING: ASTM A924 AND A653 G90 GALVANIZED STEEL; MINIMUM 24 GAGE.
      b. PREFINISHED METAL FLASHING: 24 GAGE GALVANIZED STEEL WITH FACTORY FINISHED KYNAR 500 TYPE FLUOROPOLYMER COATING AND STRIPPABLE PROTECTIVE FILM; COLOR AS SELECTED FROM MANUFACTURER'S FULL RANGE OF COLORS.
      c. ALUMINUM FLASHING: ASTM B209, ALLOY AS REQUIRED TO MATCH FINISH SPECIFIED FOR OTHER ALUMINUM COMPONENTS; THICKNESS MINIMUM 0.050" AT FLASHING.
      d. FLEXIBLE FLASHING

E. WEATHER BARRIERS:
   1. SHEET WEATHER BARRIER MEMBRANE: (DUPONT TYVEK COMMERCIAL WRAP) MANUFACTURER: DUPONT; 4417 LANCASTER PIKE, CHESTNUT RUN PLAZA 728, WILMINGTON, DE 19805; 1-800-44-TYVEK (8-9835); HTTP://WWW.CONSTRUCTION.TYVEK.COM INSTALLATION SHALL BE IN ACCORDANCE WITH WEATHER BARRIER MANUFACTURER'S INSTALLATION GUIDELINES AND RECOMMENDATIONS. SECURE USING WEATHER BARRIER MANUFACTURER RECOMMENDED FASTENERS, SPACE 12-18 INCHES VERTICALLY ON CENTER ALONG STUD LINE, AND 24 INCHES ON CENTER, MAXIMUM HORIZONTALLY.

F. WATERPROOF MEMBRANE:
   1. PROVIDE A MINIMUM 30 MIL. WATERPROOF MEMBRANE THAT IS COMPATIBLE WITH APPLIED APPLICABLE FLOOR FINISH AND AS MAY BE REQUIRED BY LANDLORD, WHERE INDICATED ON DRAWINGS.
   2. EXTEND A MINIMUM OF 4" UP VERTICAL SURFACES IN TOILET ROOM AND WHERE REQUIRED BY LOCAL JURISDICTION. SEAL AS RECOMMENDED BY THE MANUFACTURER.

DIVISION 8 - OPENINGS

A. DOORS AND HARDWARE:
   1. DOOR HARDWARE: REFER TO DOOR SCHEDULE FOR HARDWARE SPECIFICATIONS.
   2. HOLLOW METAL FRAMES: WELDED. MINIMUM 16 GAUGE. SIZE AND SHAPE PER DOOR SCHEDULE.
   3. LABELED DOORS: WHERE REQUIRED, PROVIDE U.L. LABEL DOORS AND FRAMES PER APPLICABLE STATE AND LOCAL BUILDING CODES. LABEL DOORS TO RECEIVE DOOR CLOSER.
   4. FABRICATE AND ERECT TRUE, PLUMB AND SQUARE AS SPECIFIED AND AS DETAILED AND PER MANUFACTURER'S RECOMMENDATIONS.

B. ACCESS PANELS:
   1. FOR GYPSUM BOARD SOFFIT OR WALL: 24" X 24" SURFACE MOUNTED, MODEL #AP24, AS MANUFACTURED BY INTEXFORMS INC. (916) 388-9933 OR OTHER WHICH MUST BE APPROVED BY OWNERS CONSTRUCTION MANAGER. SUBSTITUTE WITH "B" LABEL FIRE PANEL, MODEL FW 5050, KEY LOCK, ONLY IF A RATED DOOR IS REQUIRED PER CODES.
   2. FOR HVAC EQUIPMENT ARE NORMALLY INDICATED ON THE HVAC AND REFLECTED CEILING PLANS. IN ABSENCE OF DEFINED LOCATIONS, THE GENERAL CONTRACTOR IS TO FURNISH AND INSTALL ACCESS PANELS AS NECESSARY TO FURNISH REASONABLE, SAFE ACCESS TO SERVICE ALL SERVICEABLE COMPONENTS OF EACH PIECE OF EQUIPMENT. ASSUMED ACCESS SHALL BE BY A TECHNICIAN(S) STANDING FIRMLY ON A LADDER. WHERE ACCESS PANELS OR REMOVABLE DIFFUSERS CANNOT BE LOCATED IMMEDIATELY ADJACENT TO THE EQUIPMENT, THE CONTRACTOR IS TO FURNISH A NON-COMBUSTIBLE CATWALK OR ABOVE CEILING SECURED PLANKING OR METAL DECKING OR SIMILAR NON-COMBUSTIBLE MATERIAL TO PERMIT ACCESS TO THE EQUIPMENT FROM THE NEAREST ACCESS PANEL OR LIFT-OUT DIFFUSER. CATWALKS MUST BE OBSTACLE-FREE TO A HEIGHT OF 3 FOOT 0 INCHES ABOVE THE CATWALK. CATWALKS MUST BE CAPABLE OF SAFELY SUPPORTING A MINIMUM OF TWO (2) TECHNICIANS PLUS EQUIPMENT AND BE CONSTRUCTED OF NON-COMBUSTIBLE MATERIALS.

C. GLASS AND GLAZING:
   1. PROVIDE GLASS AND ALL GLAZING ACCESSORIES AS REQUIRED FOR A COMPLETE INSTALLATION.
   2. ALL GLAZING SHALL COMPLY WITH GLASS ASSOCIATION OF NORTH AMERICA (GANA) AND ALL SAFETY GLAZING SHALL COMPLY WITH CONSUMER PRODUCT STANDARD 16 CFR 1201 AND ANSI Z97.1.
   3. ACCEPTABLE MANUFACTURERS INCLUDE PPG, VIRACON, GUARDIAN, PILKINGTON OR AS APPROVED BY OWNER.
   4. GLAZING SHALL BE FULLY TEMPERED, SELECT GLAZING QUALITY, CLEAR FLOAT GLASS COMPLYING WITH ASTM C1048, UNLESS OTHERWISE INDICATED.
      a. INTERIOR GLAZING SHALL BE 1/2" OR 3/4" TEMPERED, UNLESS OTHERWISE INDICATED.
      b. EXTERIOR GLAZING SHALL BE 1" TEMPERED INSULATED WITH DUAL SEAL. (MAKEUP: 1/4" CLEAR TEMPERED EACH SIDE OF 1/2" AIR SPACE.)
      c. HIGH WIND ZONE GLAZING, WHERE APPLICABLE, SHALL BE AS NOTED ON DRAWINGS.
      d. EXPOSED AND BUTT EDGES SHALL BE EASED AND POLISHED
      e. CORNER EDGES SHALL BE LAP-JOINT CORNERS WITH EXPOSED EDGES POLISHED.
   5. PROVIDE SILICONE COMPATIBLE NEOPRENE OR EPDM SETTING BLOCKS AND SPACERS, WHERE IN CONTACT WITH SILICONE SEALANT.
   6. SEALANT TO BE ONE-COMPONENT SILICONE BY DOW, GE OR TREMCO OR AS RECOMMENDED BY GLAZING AND STOREFRONT MANUFACTURER.
   7. GLAZING GASKETS TO BE RESILIENT SILICONE EXTRUDED SHAPE TO SUIT GLAZING RECEIVER SLOT.
   8. INSTALL IN COMPLIANCE WITH GANA GLAZING MANUAL AND GLAZING MANUFACTURER INSTRUCTIONS.
      a. DO NOT ALLOW GLASS TO TOUCH METAL SURFACES.
      b. COMPLY WITH NFPA 80 FOR GLASS IN FIRE-RATED OPENINGS.
      c. PLACE SETTING BLOCKS AT QUARTER POINTS WITH EDGE BLOCK, NO MORE THAN 6" FROM CORNERS.
      d. INSTALL REMOVABLE STOPS WITHOUT DISPLACING GLAZING GASKET.

D. WALL MOUNTED GLASS MIRRORS:
   1. PROVIDE GLASS MIRRORS FROM AN EXPERIENCED INSTALLER WHO HAS COMPLETED MIRROR GLAZING SIMILAR IN MATERIAL, DESIGN, AND EXTENT TO THAT INDICATED; WHOSE WORK HAS RESULTED IN MIRROR INSTALLATIONS WITH A RECORD OF NOT LESS THAN 5 YEARS OF SUCCESSFUL IN-SERVICE PERFORMANCE.
   2. COMPLY WITH THE APPLICABLE RECOMMENDATIONS OF THE FOLLOWING. WHERE RECOMMENDATIONS CONFLICT THE MORE STRINGENT SHALL APPLY.
      a. GLASS ASSOCIATION OF NORTH AMERICA (GANA): "GLAZING MANUAL" AND THE MIRROR DIVISION'S "MIRRORS, HANDLE WITH EXTREME CARE: TIPS FOR THE PROFESSIONAL ON THE CARE AND HANDLING OF MIRRORS."
      b. NATIONAL GLASS ASSOCIATION (NGA): "CUSTOM MIRRORS, FABRICATION AND INSTALLATION.
   3. PROTECT MIRRORS ACCORDING TO MIRROR MANUFACTURER'S WRITTEN INSTRUCTIONS AND AS NEEDED TO PREVENT DAMAGE TO MIRRORS FROM CONDENSATION, TEMPERATURE CHANGES DIRECT EXPOSURE TO SUN, OR OTHER CAUSES.
   4. COMPLY WITH MIRROR MANUFACTURER'S WRITTEN INSTRUCTIONS FOR SHIPPING, STORING, AND HANDLING MIRRORS AS NEEDED TO PREVENT DETERIORATION OF SILVERING, DAMAGE TO EDGES, AND ABRASION OF GLASS SURFACES AND APPLIED COATINGS. STORE INDOORS, PROTECTED FROM MOISTURE INCLUDING CONDENSATION.
   5. PROVIDE SILVERED FLAT GLASS MIRROR MATERIAL: 6.0 MM THICK AND COMPLYING WITH ASTM C 1503, MIRROR SELECT QUALITY FOR USE IN VISUALLY DEMANDING APPLICATIONS REQUIRING MINIMAL DISTORTIONS AND BLEMISHES.
   6. MIRROR EDGE TREATMENT: CUTTING AND POLISHING
      a. TYPICAL MIRRORS: FLAT EDGES WHERE THE CLEAN CUT "SQUARE" EDGE OF THE GLASS IS FLAT AND SURFACES EDGES ARE SLIGHTLY ARRISSED. AFTER GRINDING THE ARISSES, EDGES SHALL BE POLISHED TO A HIGH GLOSS SURFACE WHERE THE SURFACE REFLECTIVITY IS SIMILAR IN APPEARANCE TO THE MAJOR SURFACE OF THE GLASS.
      b. IMMEDIATELY AFTER CUTTING THE FINAL SIZES, AND APPLYING EDGE TREATMENT; FACTORY SEAL EDGES OF MIRRORS WITH EDGE SEALER TO PREVENT CHEMICAL OR ATMOSPHERIC PENETRATION OF GLASS COATING. SEALER TO BE COMPATIBLE WITH GLASS COATING AND APPROVED BY MIRROR MANUFACTURER TO PROTECT AGAINST SILVER DETERIORATION.
   7. PROVIDE THE FOLLOWING, UNLESS OTHERWISE NOTED ON THE DRAWINGS FOR APPLICABLE CONDITIONS;
      a. MIRROR SAFETY BACKING: CRL 24" CATEGORY II SHATTERPROOF SAFETY TAPE #2MT24. C.R. LAURENCE CO. INC. 2503 E. VERNON AVE. LOS ANGELES, CA 90058 (800) 421-6144. SAFETY BACKING IS REQUIRED FOR ALL MIRRORS.
      b. SETTING BLOCKS: NON-RUBBER OR NON-NEOPRENE BASED ELASTOMERIC MATERIAL MANUFACTURED FOR SETTING SILVERED FLAT GLASS MIRRORS, COMPATIBLE WITH ADHESIVE USED FOR PLACEMENT, WITH A TYPE A SHORE DUROMETER HARDNESS OF 85, PLUS OR MINUS 5. 1/8" WIDE X 1/4" HIGH X 4" LONG.
      c. MIRROR MASTIC: PALMER PRODUCTS CORP., "MIRROR-MASTIC", (502) 893-3668, (800) 431-6151, FAX (502) 895-9253.
      d. DRYWALL AND PLYWOOD PAINT (POROUS SUBSTRATE PRIMER): PALMER PRODUCTS CORP. "MIRROR-MASTIC BOND", (502) 893-3668, (800) 431-6151, FAX (502) 895-9253.
      e. TOP AND BOTTOM ALUMINUM J CHANNELS: ALUMINUM EXTRUSIONS WITH A RETURN DEEP ENOUGH TO PRODUCE A GLAZING CHANNEL TO ACCOMMODATE 6 MM THICK MIRRORS AND HEAVY BODIED MIRROR MASTIC SPECIFIED AND IN A SINGLE PIECE. THE ENDS OF THE BACK LIPS OF ALL CHANNELS SHALL BE FACTORY SNIPPED AND FILED SO THAT THEY WILL NOT BE SEEN AFTER INSTALLATION.
         (1) BOTTOM TRIM: C.R. LAURENCE CO. INC., 1/4" STANDARD "J" CHANNEL (CATALOG NUMBER D636P POLISHED FINISH), (800) 421-6144, FAX (800) 262-3299. J-CHANNELS FORMED WITH FRONT LEG AND BACK LEG NOT LESS THAN 3/8" AND 7/8" IN HEIGHT, RESPECTIVELY.
         (2) TOP TRIM: C.R. LAURENCE CO. INC., 1/4" DEEP NOSE "J" CHANNEL (CATALOG NUMBER D645P POLISHED FINISH), (800) 421-6144, FAX (800) 262-3299. J-CHANNELS FORMED WITH FRONT LEG AND BACK LEG NOT LESS THAN 5/8" AND 1-3/16" IN HEIGHT, RESPECTIVELY.
      f. STUD FASTENERS: PROVIDE #6 GAGE DIAMETER, 1-5/8" LONG, PHILLIPS BUGLE HEAD, SLEF-DRILLING TYPE, FINE THREADED STEEL SCREW FASTENERS IN QUANTITY AS REQUIRED FOR SUPPORT AND FASTENING OF WOOD TRIMS AND MIRRORS CHANNELS TO DRYWALL STUD FRAMING AND SHEET METAL BACKER PLATES. HILTI KWI-PRO SELF DRILL DRYWALL SCREWS, ORDERING NAME: 6" X 1'-5/8" PBH SD, ITEM #: 00086216; HILTI CORPORATION (800) 879-8000.
      g. PLYWOOD FASTENERS: PROVIDE MINIMUM #6 GAGE DIAMETER, PHILLIPS FLAT HEAD, SHARP POINTED, COARSE THREADED, STEEL WOOD SCREW FASTENERS IN QUANTITY AS REQUIRED. FURNISH PLYWOOD FASTENERS IN LENGTH AS REQUIRED TO SPAN THROUGH WOOD MIRROR TRIM, AND MIRROR CHANNELS, PLUS 3/4"
   8. PREPARATION
      a. COMPLY WITH MASTIC MANUFACTURER'S WRITTEN INSTALLATION INSTRUCTIONS FOR PREPARATION OF SUBSTRATES.
         (1) MIRROR, DRYWALL AND PLYWOOD SUBSTRATES SHALL BE FREE OF DUST, BE CLEAN, AND DRY PRIOR TO APPLICATION OF MIRROR MASTIC AND DRYWALL AND PLYWOOD PAINT. IF PLYWOOD OR DRYWALL SURFACES HAVE BEEN PAINTED PRIOR TO APPLICATION OF THE SPECIFIED DRYWALL AND PLYWOOD PAINT THE EXISTING PAINT SHALL BE SANDED THROUGH THE ORIGINAL SURFACE AND THE SUBSTRATE CLEANED PRIOR TO THE APPLICATION OF DRYWALL AND PLYWOOD PAINT.

E. ALUMINUM-FRAMED ENTRANCES & STOREFRONTS:
   1. GENERAL: INSTALL G.C. SUPPLIED EXTRUDED ALUMINUM ENTRANCE SYSTEM WITH DOORS, FRAMES, HARDWARE, AND ACCESSORIES AS REQUIRED FOR COMPLETE WEATHERTIGHT INSTALLATION.
   2. STANDARDS: COMPLY WITH ARCHITECTURAL ALUMINUM MANUFACTURERS ASSOCIATION (AAMA) "ALUMINUM STORE FRONT AND ENTRANCE MANUAL."
   3. CODES AND REGULATIONS: COMPLY WITH APPLICABLE CODES AND REGULATIONS.
   4. WARRANTY:
      a. CORRECT DEFECTIVE WORK FOR A PERIOD OF 5 YEARS FROM SUBSTANTIAL COMPLETION.
      b. 5 YEAR MANUFACTURER WARRANTY AGAINST FAILURE OF GLASS SEALS. INCLUDE PROVISION FOR REPLACEMENT OF FAILED UNITS.
      c. 5 YEAR MANUFACTURER WARRANTY AGAINST FINISH DEGRADATION.
   5. MANUFACTURER: AMERICAN PRODUCTS, INC. (API) P2100 SERIES OR EQUAL AS APPROVED BY OWNER.
   6. STOREFRONT: EXTRUDED ALUMINUM ENTRANCE SYSTEM AS INDICATED ON DRAWINGS.
      a. ALUMINUM TYPE: AS RECOMMENDED BY MANUFACTURER FOR APPLICATION INDICATED, BUT NOT LESS THAN EXTRUDED ALUMINUM, ASTM B221, 6061 OR 6063 ALLOY AND T5 OR T6 TEMPER.
      b. FINISH, PROFILE AND COLOR AS INDICATED ON DRAWINGS.
   7. GLAZING: AS SPECIFIED HEREIN UNDER GLASS AND GLAZING
   8. GLAZING ACCESSORIES: AS SPECIFIED HEREIN AND OF TYPE RECOMMENDED BY MANUFACTURER TO SUIT SECURITY LOCATIONS AND APPLICATIONS FOR DRY GLAZING INSTALLATION.
   9. MISCELLANEOUS MATERIALS:
      a. STEEL REINFORCEMENT AND BRACKETS: MANUFACTURER'S STANDARD WITH MINIMUM 2 OZ. HOT-DIP ZINC COATING, ASTM A123, APPLIED AFTER FABRICATION.
      b. BITUMINOUS PAINT: COLD-APPLIED MASTIC, SSPC PAINT 12, COMPOUNDED FOR 30 MIL THICKNESS PER COAT.
      c. FLASHING: INSTALL SUB-SILL FLASHING MEMBERS; MINIMUM 22 GAGE SHEET ALUMINUM OF SIZES AND SHAPES INDICATED AND AS REQUIRED TO DRAIN WATER TO EXTERIOR; MATCH ADJACENT ALUMINUM MEMBER FINISH.
      d. ANCHORING DEVICES: CORROSION RESISTANT TYPE CAPABLE OF SUPPORTING ENTRANCE SYSTEM AND SUPERIMPOSED DESIGN LOADS; DESIGN TO ALLOW ADJUSTMENTS OF SYSTEM PRIOR TO BEING PERMANENTLY FASTENED IN PLACE.
   10. FABRICATION:
      a. ACCURATELY FIT TOGETHER JOINTS AND CORNERS; MATCH COMPONENTS ENSURING CONTINUITY OF LINE AND DESIGN; ENSURE JOINTS AND CONNECTIONS ARE FLUSH, 1/64th INCH MAX. AND WEATHERPROOF. NO CAULK AT ANY JOINTS OR CONNECTIONS. NO EXCEPTIONS!
      b. SEPARATE DISSIMILAR MATERIALS WITH BITUMINOUS PAINT OR PREFORMED SEPARATORS WHICH WILL PREVENT CORROSION.
   11. INSTALLATION: INSTALL ALUMINUM FRAMED STOREFRONT ASSEMBLIES, INCLUDING ENTRANCES, IN ACCORDANCE WITH MANUFACTURER'S RECOMMENDATIONS AND TO MEET DESIGN REQUIREMENTS INDICATED, FOR WEATHERTIGHT INSTALLATION.
      a. ENSURE ASSEMBLIES ARE PLUMB, LEVEL AND FREE OF WARP OR TWIST; MAINTAIN DIMENSIONAL TOLERANCES AND ALIGNMENT WITH ADJACENT WORK.
      b. USE SUFFICIENT ANCHORAGE DEVICES TO SECURELY AND RIGIDLY FASTEN ASSEMBLIES TO BUILDING.
      c. INSTALL HARDWARE IN ACCORDANCE WITH MANUFACTURER'S RECOMMENDATIONS, USING PROPER TEMPLATES. COORDINATE INSTALLATION OF CYLINDERS WITH SECTION 08700.
      d. INSTALL SILL MEMBERS AND THRESHOLDS IN BED OF COMPOUND, JOINT FILLERS OR GASKETS TO PROVIDE WEATHERTIGHT CONSTRUCTION.
      e. GLASS INSTALLATION: COMPLY WITH GANA GLAZING MANUAL AND GLAZING MANUFACTURER INSTRUCTIONS. DO NOT ALLOW GLASS TO TOUCH METAL SURFACES.
   12. ALL ALUMINUM STOREFRONT SYSTEMS IN COASTAL AREAS, AS DEFINED BY 2010 NATIONAL ATMOSPHERIC DEPOSITION PROGRAM (NADP) MAP, SHALL:
      a. BE TREATED WITH CHROME PHOSPHATE PRIMER FOLLOWED BY A HIGH PERFORMANCE FLUOROPOLYMER PAINT OR ANODIZED IN A CLASS I ARCHITECTURAL FINISH, UNLESS OTHERWISE RECOMMENDED BY THE MANUFACTURER.
      b. BE ISOLATED FROM OTHER METALS WITH NON-ABSORBENT , NON-CONDUCTIVE, INSULATE OR POLYMER SLEEVES AND WASHERS.
      c. BE ATTACHED WITH STAINLESS STEEL FASTENERS, UNLESS OTHERWISE RECOMMENDED BY THE MANUFACTURER.

DIVISION 9 - FINISHES

A. GYPSUM DRYWALL:
   1. FURNISH AND INSTALL ALL GYPSUM DRYWALL SYSTEMS COMPLETE WITH PARTITION FRAMING, CEILING SUSPENSION SYSTEMS, AND RELATED ACCESSORIES, PARTS, MATERIALS, ETC. AS SHOWN ON DRAWINGS AND AS SPECIFIED. INSTALL ALL MATERIALS PER MANUFACTURER'S SPECIFICATIONS AND RECOMMENDATIONS.
   2. COMPLY WITH ASTM C645 AND ASTM C754 FOR NON-STRUTUCTURAL METAL FRAMING AND ASTM C955 AND ASTM C1007 FOR STRUCTURAL (COLD-FORMED) METAL FRAMING. (SPECIFIED IN DIVISIONS) REFER TO DRAWINGS FOR LOCATIONS OF BOTH STRUCTURAL AND NON-STRUCTURAL METAL FRAMING.
   3. GYPSUM DRYWALL: U.S. GYPSUM 5/8" THICK FIRE CODE SHEETROCK (TYPE 'X'), GEORGIA PACIFIC, NATIONAL GYPSUM PANELS OF STANDARD QUALITY OR APPROVED EQUAL. GENERAL CONTRACTOR MAY USE NON-RATED 5/8" THICK BOARD IN AREAS OF STORE WHERE ALLOWED BY STATE AND LOCAL CODES. ALWAYS USE TYPE 'X' ON TENANT SEPARATION WALLS.
   4. WET LOCATIONS: PROVIDE A WATER-RESISTANT GYPSUM BACKING BOARD OR GLASS MAT WATER- RESISTANT GYPSUM BACKING BOARD.
   5. FASTENERS: DRYWALL SCREWS OF PROPER SIZE AND TYPE INSTALLED PER GA-216.
   6. ACCESSORIES AND TRIM: U.S. GYPSUM BOARD OR GOLD BOND SYSTEM OF COMPONENTS AND PERFORATED TAPE. ALL METAL TRIM SHALL BE PERFORATED FLANGE TYPE FOR COMPOUND FINISH.
   7. INSTALL ALL MATERIALS PER MANUFACTURER'S SPECIFICATIONS AND RECOMMENDATIONS.
   8. PROVIDE AT A MINIMUM A LEVEL 4 FINISH PRIOR TO THE APPLICATION OF THE FINAL FINISHES. REFER TO THE GYPSUM ASSOCIATION GUIDELINES FOR A DESCRIPTION OF THE DESIRED LEVEL.

B. CEILING SYSTEMS:
   1. FURNISH AND INSTALL CEILING SYSTEM COMPLETE WITH SUSPENSION SYSTEM AND RELATED ACCESSORIES AS SHOWN ON DRAWINGS AND AS SPECIFIED.
   2. SUSPENSION SYSTEMS SHALL BE ADEQUATE TO SUPPORT LIGHT FIXTURES, CEILING, GRILLES, DIFFUSERS AND OTHER NORMAL ACCESSORIES. PROVIDE MANUFACTURED SYSTEM COMPONENTS FROM A SINGLE MANUFACTURER.
   3. INSTALL MANUFACTURED CEILING AND SUSPENSION SYSTEMS IN STRICT ACCORDANCE WITH MANUFACTURER'S RECOMMENDATIONS. FINISH CEILING SHALL BE LEVEL, WITH JOINTS SNUG AND SQUARE, AND TILES OR PANELS IN PERFECT CONDITION.
   4. MATERIALS AND FINISHES:
      a. REFER TO DRAWINGS FOR LOCATION OF SPECIFIED MATERIALS AND FINISHES WHEN APPLICABLE.
      b. NON-SALES CEILING: AS SCHEDULED OR EQUAL. CLASS "A" RATING.
      c. WHEN A ONE-HOUR FIRE-RATED CEILING ASSEMBLY IS REQUIRED BY LANDLORD, STATE OR LOCAL CODES, THEN GENERAL CONTRACTOR IS TO CONFORM WITH UNDERWRITER'S LABORATORIES DESIGN FOR A ONE-HOUR RATED ASSEMBLY AS SCHEDULED.
   5. COLD-FORMED METAL CEILING SYSTEMS: COMPLY WITH ASTM C754 FOR CONDITIONS INDICATED.
      a. TIE WIRE TO COMPLY WITH ASTM A641 CLASS 1 ZINC COATING, 0.0625 INCH DIAMETER WIRE.
      b. CONCRETE ANCHORS TO BE FABRICATED FROM CORROSION-RESISTANT MATERIALS CAPABLE OF SUSTAINING A LOAD EQUAL TO 5 TIMES THAT IMPOSED BY CONSTRUCTION PER ASTM E488.
      c. WIRE HANGERS TO BE 0.162" DIAMETER WITH CLASS 1 ZINC COATING AND SHALL COMPLY WITH ASTM A641.
      d. HANGER RODS TO BE MINIMUM 0.25" DIAMETER COMPLYING WITH ASTM A510.
      e. ANGLE HANGERS SHALL COMPLY WITH ASTM A653.
      f. CARRYING CHANNELS SHALL BE COLD-ROLLED COMMERCIAL STEEL WITH BASE METAL THICKNESS OF 0.0538" AND A MINIMUM 1/2" FLANGE.
      g. FURRING CHANNELS SHALL BE 7/8" DEEP HAT-SHAPED SECTIONS WITH MINIMUM BASE THICKNESS OF 0.0179".
      h. INSTALL COLD-ROLLED CEILING SYSTEM COMPONENTS IN SIZES AND SPACES INDICATED, BUT NOT LESS THAN THAT REQUIRED BY THE REFERENCED STANDARDS
         1) WIRE HANGERS - 48" O.C. MINIMUM.
         2) CARRYING CHANNELS - 48" O.C.
         3) FURRING CHANNELS - 24" O.C.
      i. SEISMIC STANDARDS MUST COMPLY WITH THE FOLLOWING:
         1) SUSPENSION SYSTEM COMPONENTS AND INSTALLATION - ASTM C754-11.
         2) ASCE 7-10.
         3) AISI 5100-07/52-10.
         4) CALIFORNIA BUILDING CODE (LATEST EDITION).
      j. WATER RESISTANT GYPSUM BACKING BOARD: PROVIDE TYPE 'X' FOR SURFACES BEHIND THINSET TILE, EXCEPT FOR WET AREAS AND AS OTHERWISE INDICATED. PROVIDE FOR MOLD RESISTANCE, SCORE OF 10, PER ASTM D3273.
      k. PROVIDE CEMENTITIOUS FIBER-MAT REINFORCED SHEATHING AS A BACKERBOARD FOR TILE IN WET AREAS AND WHERE INDICATED ON DRAWINGS. REFER TO DIVISION 6 OF SPECIFICATIONS FOR MORE INFORMATION.

C. CERAMIC TILE:
   1. CERAMIC TILE AS SPECIFIED IN FINISH SCHEDULE AND RESPONSIBILITY SCHEDULE (IF APPLICABLE).
   2. INSTALL CERAMIC TILE USING RECOMMENDED METHODS OF THE TILE CONTRACTORS ASSOCIATION OF AMERICA; THE TILE COUNCIL OF NORTH AMERICA, INC. (TCNA); AND/OR THE TILE AND TERRAZZO INSTITUTE OF CANADA.
   3. INSTALL CERAMIC TILE USING GROUT AND JOINT SPACING SPECIFIED IN FINISH SCHEDULE.
   4. ADHESIVE AND GROUT ARE TO BE PROVIDED AND INSTALLED BY GENERAL CONTRACTOR (PER MANUFACTURER'S SPECIFICATIONS) AS INDICATED ON DRAWINGS.
   5. CAREFULLY CLEAN ALL WORK AND REPLACE OR RE-POINT ANY DAMAGED WORK AND LEAVE IN PERFECT CONDITION. USE NO ACID, AGENT OR DEVICE THAT WILL MAR SURFACE. CONSULT WITH OWNER'S CONSTRUCTION MANAGER FOR INSTRUCTIONS (DO NOT POLISH CERAMIC TILE).
   6. CERAMIC TILES ARE TO BE SET WITHOUT TRIPPING HAZARD TO CUSTOMERS OR STAFF.
   7. THE GENERAL CONTRACTOR IS RESPONSIBLE TO CORRECT RAISED CERAMIC TILES FOR THE ENTIRE DURATION OF THE WARRANTY PERIOD AT THE DIRECTION OF THE OWNER'S CONSTRUCTION MANAGER.
   8. TEST ON GRADE SLABS FOR RELATIVE HUMIDITY WITH A PROBE TEST COMPLYING WITH ASTM F-2170. IF THE VALUE DOES NOT MEET FLOOR FINISH MOISTURE STANDARD AND/OR IF THE VALUE IS ABOVE 75%, WHICHEVER IS MORE STRINGENT, THEN MOISTURE MITIGATION IS REQUIRED.
   9. IF SLAB MOISTURE MITIGATION IS REQUIRED, THE CONCRETE SUBSTRATE MUST BE PREPARED BY SHOT-BLASTING TO ACHIEVE A SURFACE PROFILE BETWEEN CSP-3 AND CSP-6 AS PER ICRI STANDARDS. SUBJECT TO COMPLIANCE WITH MANUFACTURER COMPLIANCE, PROVIDE A MOISTURE MITIGATION BARRIER BY ONE OF THE FOLLOWING:
      a. "PLANISEAL VS FAST" BY MAIPEI CORP.
      b. "LATICRETE NXT PRIMER" APPLIED OVER "312 VAPOR REDUCTION MEMBRANE".
   10. INSTALL THINSET TILE OVER WATER RESISTANT GYPSUM BACKING BOARD OR CEMENTITIOUS FIBER-MAT REINFORCED SHEATHING AS INDICATED ON DRAWINGS AND SPECIFIED IN SPECIFICATIONS - DIVISION 9 AND DIVISION 6, RESPECTIVELY.
   11. PROVIDE CRACK SUPPRESSION MEMBRANE UNDER THINSET FLOOR TILE ON CONCRETE SLABS. PROVIDE MEMBRANE AS RECOMMENDED BY TILE MANUFACTURER.
      a. MATERIAL TO COMPLY WITH ANSI 118.12.
      b. THICKNESS: 20 MILS MAXIMUM.
      c. CRACK RESISTANCE: NO FAILURE AT 1/16" GAP, MINIMUM.

D. GLASS FIBER REINFORCED PLASTIC PANELS:
   1. PROVIDE WALL PANELS BY MARLITE OR APPROVED EQUAL; STANDARD FRP; SIZE, COLOR AND CONFIGURATION IN ACCORDANCE WITH THE DRAWINGS.
   2. SURFACE BURNING CHARACTERISTICS TO BE A FLAME SPREAD INDEX OF 25 MAXIMUM AND SMOKE DEVELOPED INDEX OF 450 MAXIMUM PER ASTM E84.
   3. PROVIDE SEALANT AND ADHESIVE AS RECOMMENDED BY THE MANUFACTURER.

E. RESILIENT BASE:
   1. PROVIDE AS INDICATED ON FINISH SCHEDULE ON DRAWINGS.
   2. PROVIDE COVED BASE AT HARD FLOOR SURFACES AND STRAIGHT BASE AT CARPETED AREAS.
   3. MITER INTERNAL CORNERS; USE PRE-MOULDED SECTIONS FOR EXTERNAL CORNERS AND EXPOSED ENDS; SCRIBE AN FIT TO DOOR FRAMES AND OTHER OBSTRUCTIONS.
   4. INSTALL USING WATER-BASED ADHESIVE AS RECOMMENDED BY MANUFACTURER FOR SUBSTRATE CONDITIONS INDICATED.
   5. FILL ALL SUBSTRATE VOIDS, PRIOR TO INSTALLATION, WITH MANUFACTURERS RECOMMENDED ADHESIVE FILLER MATERIAL.

F. VINYL PLANK FLOORING:
   1. GENERAL: G.C. TO INSTALL OWNER SUPPLIED VINYL STRIP FLOORING SYSTEM WITH ACCESSORIES AS REQUIRED FOR COMPLETE FINISHED INSTALLATION.
   2. PROJECT CONDITIONS: PRIOR TO INSTALLATION OF ANY FLOORING, GC MUST ENSURE THAT THE JOBSITE AND SUB-FLOOR MEET THE REQUIREMENTS OF THE FOLLOWING INSTRUCTION.
      a. G.C. TO PERFORM MOISTURE TEST ON ALL CONCRETE FLOORS AS DIRECTED BY NWFA AND INSTALL BOSTIK MVP4 VAPOR BARRIER. MOISTURE CONTENT OF WOOD SUB-FLOOR MUST NOT EXCEED 12% AND CONCRETE MOISTURE CONTENT MUST NOT EXCEED 3LBS. b. G.C. TO PROVIDE MOISTURE TEST REPORT TO CONSTRUCTION MANAGER IMMEDIATELY AFTER DEMOLITION AND/OR 1 WEEK PRIOR TO FLOOR INSTALLATION. IF THE G.C. FAILS TO PROVIDE REPORT, ANY FLOOR FAILURE ATTRIBUTED TO MOISTURE, IT WILL BE THE RESPONSIBILITY OF THE G.C. TO REPLACE (LABOR AND MATERIAL).
      c. ALL WORK INVOLVING WATER OR MOISTURE SHOULD BE COMPLETED BEFORE FLOOR INSTALLATION.
      d. ROOM TEMPERATURE AND HUMIDITY OF INSTALLATION AREA SHOULD BE CONSISTENT WITH NORMAL, YEAR-ROUND LIVING CONDITIONS FOR AT LEAST A WEEK BEFORE INSTALLATION. ROOM TEMPERATURE OF 60 TO 70 DEGREE F AND HUMIDITY RANGE OF 40 TO 60% IS RECOMMENDED.
      e. G.C. TO STORE FLOORING AT INSTALLATION SITE FOR 72 HOURS BEFORE INSTALLATION TO ALLOW FLOORING TO ADJUST TO ROOM TEMPERATURE AND HUMIDITY. DO NOT STORE DIRECTLY ON CONCRETE OR NEAR OUTSIDE WALLS. THIS FLOORING MAY NOT BE ACCEPTABLE FOR FULL BATHROOM INSTALLATIONS BECAUSE OF MOISTURE ASSOCIATED WITH SUCH LOCATIONS.
      f. COMMENCEMENT OF WORK IS ACCEPTANCE OF CONDITIONS.
   3. MANUFACTURERS: REFER TO FINISH SCHEDULE.
   4. ADHESIVE: AS RECOMMENDED BY MANUFACTURER TO ENSURE MAXIMUM DURABILITY OVER TIME; NONTOXIC, WATERPROOF TYPE SUITABLE FOR FLOORING, SUBSTRATE, AND ACCEPTABLE TO APPLICABLE AUTHORITIES.
   5. MOISTURE VAPOR PROTECTION: BOSTIK MVP4 MOISTURE BARRIER OR AS RECOMMENDED BY MANUFACTURER; ONE-PART, TROWEL APPLIED, ELASTOMERIC, MOISTURE CURE URETHANE MEMBRANE. APPLY WITH 3/16" X 5/32" V-NOTCH TROWEL IS RECOMMENDED.

G. VINYL RESILIENT TILE:
   1. GENERAL: PROVIDE RESILIENT TILE FLOORING SYSTEM WITH ACCESSORIES AS REQUIRED FOR COMPLETE FINISHED INSTALLATION.
   2. PROJECT CONDITIONS: ENSURE FLOOR SURFACES ARE SMOOTH AND FLAT WITH MAXIMUM VARIATION OF 1/8" IN 10'-0"; ENSURE CONCRETE FLOORS ARE DRY AND EXHIBIT NEGATIVE ALKALINITY, CARBONIZING AND DUSTING.
   3. PRIOR TO FINISH FLOORING INSTALLATION, COMPLETE MOISTURE TESTING OF CONCRETE AS SPECIFIED IN CERAMIC TILE SECTION - DIVISION 9.
   4. RESILIENT TILE: 12" BY 12" BY 1/8" THICK; VINYL COMPOSITION TILE CONFORMING TO ASTM F1066, COMPOSITION 1; COLOR AND PATTERN AS INDICATED IN FINISH SCHEDULE.
      a. FLAMMABILITY: PROVIDE MATERIALS TESTED UNDER ASTM E648, FLOORING RADIANT PANEL TEST, WITH RESULTS OF 0.45 WATTS/CM2 OR HIGHER.
      b. SLIP RESISTANCE; PROVIDE MATERIALS TESTED UNDER ASTM D2047, JAMES SLIP TEST WITH MINIMUM 0.6 RATING FOR FLOORS.
   5. RESILIENT BASE: REFER TO RESILIENT BASE SECTION.
   6. EDGE STRIPS AND ACCESSORIES: RUBBER AND VINYL EDGE STRIPS MATCHING RESILIENT FLOORING; LATEX-MODIFIED PORTLAND CEMENT BASED UNDERLAYMENT AND PATCHING COMPOUND; NONTOXIC WATER RESISTANT TYPE ADHESIVES. INSTALL WHERE EDGE OF TILE WOULD OTHERWISE BE EXPOSED BUTT TO FLOORING WITHOUT GAPS; SET IN ADHESIVE.
   7. CONCRETE PREPARATION: REFER TO CONCRETE SECTION - DIVISION 3.
   8. WATERPROOF MEMBRANE: ENSURE COMPATIBILITY WITH PRIMERS AND ADHESIVES. REFER TO DIVISION 7.
   9. PRIMERS AND ADHESIVES: WATERPROOF NONTOXIC TYPES AS RECOMMENDED BY FLOOR TILE AND ADHESIVE MANUFACTURERS TO SUIT FLOOR TILE AND SUBSTRATE CONDITIONS.
   10. SEALERS AND WAX: TYPE RECOMMENDED BY FLOORING MANUFACTURER FOR MATERIAL TYPE AND LOCATION.
   11. PREPARATION: CONFORM TO MANUFACTURER'S RECOMMENDATIONS FOR PREPARATION AND WITH ASTM F710; REMOVE SUBFLOOR RIDGES AND BUMPS; FILL LOW SPOTS, CRACKS, JOINTS, HOLES AND DEFECTS WITH SUBFLOOR FILLER.
   12. FLOORING INSTALLATION; CONFORM TO MANUFACTURER'S RECOMMENDATIONS AND INSTALLATION INSTRUCTIONS; SET FLOORING IN PLACE, PRESS WITH HEAVY ROLLER TO ENSURE FULL ADHESION; SCRIBE FLOORING TO WALLS, COLUMNS AND OTHER APPURTENANCES, TO PRODUCE TIGHT JOINTS
      a. MOISTURE TESTING: PROCEED WITH INSTALLATION ONLY AFTER SUBSTRATES PASS TESTING ACCORDING TO FLOORING MANUFACTURER'S WRITTEN RECOMMENDATIONS. PERFORM ONE OR BOTH TESTS, AS REQUIRED BY THE MANUFACTURER, IN ACCORDANCE WITH THE FOLLOWING:
         (1) PERFORM ANHYDROUS CALCIUM CHLORIDE TEST ACCORDING TO ASTM F 1869. PROCEED WITH INSTALLATION ONLY AFTER SUBSTRATES HAVE MAXIMUM MOISTURE-VAPOR-EMISSION RATE ACCEPTABLE TO THE FLOORING MANUFACTURER.
         (2) PERFORM RELATIVE HUMIDITY TEST USING IN SITU PROBES ACCORDING TO ASTM F 2170. PROCEED WITH INSTALLATION ONLY AFTER SUBSTRATES HAVE A MAXIMUM RELATIVE HUMIDITY LEVEL ACCEPTABLE TO THE FLOORING MANUFACTURER.
   13. CLEANING: CLEAN, SEAL AND WAX FLOORING IN ACCORDANCE WITH MANUFACTURER'S RECOMMENDATIONS.

H. PAINTING AND COATING:
   1. GENERAL: PROVIDE PAINTING OF EXPOSED ITEMS AND SURFACES NOT PREFINISHED, AS REQUIRED FOR COMPLETE FINISHED INSTALLATION.
   2. SURFACES NOT TO BE PAINTED: PREFINISHED ITEMS,; CONCEALED AND INACCESSIBLE AREAS, CODE-REQUIRED LABELS.
   3. STANDARDS: PROVIDE MATERIALS APPROVED FOR USE BY APPLICABLE AIR QUALITY MANAGEMENT DISTRICT FOR LIMITATIONS OF VOLATILE ORGANIC COMPOUNDS FOR ARCHITECTURAL COATINGS.
   4. MATERIALS QUALITY: PROVIDE ONLY PRODUCTS THAT ARE SPECIFIED IN THE FINISH SCHEDULE ON THE DRAWINGS.
   5. COLORS AND FINISHES: FOLLOW SPECIFICATIONS AND FINISH SCHEDULE.
   6. SCHEDULING PAINTING: APPLY FIRST COAT TO SURFACES THAT HAVE BEEN CLEANED, PRETREATED OR PREPARED FOR PAINTING AS SOON AS PRACTICABLE AFTER PREPARATION.
   7. PREPARATION: PERFORM PREPARATION ACCORDING TO MANUFACTURER'S TECHNICAL DATA SHEET AND CAN LABEL.
      a. EXAMINE AREAS AND CONDITIONS UNDER WHICH PAINTING WORK IS TO BE APPLIED. START OF PAINTING WORK INDICATES ACCEPTANCE OF SURFACE CONDITIONS WITHIN ANY PARTICULAR AREA.
      b. REMOVE HARDWARE, ACCESSORIES AND ITEMS IN PLACE AND NOT TO BE PAINTED, OR PROVIDE PROTECTION PRIOR TO SURFACE PREPARATION AND PAINTING, AFTER PAINTING REINSTALL REMOVED ITEMS.
   8. PRIME COATS: FOR UNFINISHED, UNSEALED, POROUS SURFACES, HARD TO COAT SUBSTRATES, SURFACES THAT DISPLAY SIGNS OF "FLASHING" AND UN-EVEN SHEEN PRIME WITH PRIMERS INDICATED WITHIN FINISH SCHEDULE.
   9. APPLICATION: APPLY PAINT ACCORDING TO THE PRODUCT TECHNICAL DATA SHEETS. USE APPLICATORS AND TECHNIQUES BEST SUITED FOR SUBSTRATE AND TYPE OF MATERIAL BEING APPLIED.
      a. APPLY ADDITIONAL COATS WHEN STAINS OR BLEMISHES SHOW THROUGH FINAL COATS, UNTIL PAINT IS A UNIFORM FINISH, COLOR AND APPEARANCE.
      b. FINISH DOORS ON TOPS, BOTTOMS AND SIDE EDGES SAME AS FACES.
      c. PROVIDE EXTRA ATTENTION TO ASSURE DRY FILM THICKNESS AT CORNERS AND CREVICES IS EQUIVALENT TO THAT OF FLAT SURFACES.
      d. PAINT SURFACES BEHIND MOVABLE EQUIPMENT AND FURNITURE SAME AS SIMILAR EXPOSED SURFACES; PAINT SURFACES BEHIND PERMANENTLY-FIXED EQUIPMENT AND FURNITURE WITH PRIME COAT ONLY.
   10. MINIMUM COATING THICKNESS: APPLY MATERIAL IN ACCORDANCE WITH THE PRODUCT TECHNICAL DATA SHEET PAYING SPECIAL ATTENTION TO DRY FILM THICKNESS (DFT)
   11. FINISH COATS: PROVIDE EVEN TEXTURE; LEAVE NO LAPS, IRREGULARITY IN TEXTURE, SKID MARKS, OR OTHER SURFACE IMPERFECTIONS.
   12. PAINT SYSTEMS: PROVIDE MINIMUM OF TWO COATS:
      a. MATERIAL AND SHEEN AS INDICATED IN FINISH SCHEDULE
   13. PROTECTION: PROTECT WORK OF OTHER TRADES WHETHER TO BE PAINTED OR NOT; CORRECT DAMAGE BY CLEANING, REPAIRING OR REPLACING, AND REPAINTING AS ACCEPTABLE TO PROJECT MANAGER.
      a. PROVIDE "WET PAINT" SIGNS TO PROTECT NEWLY PAINTED FINISHES.
      b. REMOVE TEMPORARY PROTECTIVE WRAPPINGS PROVIDED BY OTHERS FOR PROTECTION OF THEIR WORK AFTER COMPLETION OF PAINTING OPERATIONS.
   14. CLEAN-UP: DURING PROGRESS OF WORK, REMOVE DISCARDED PAINT MATERIALS, RUBBISH, CANS AND RAGS FROM SITE AT END OF EACH WORK DAY.
      a. CLEAN GLASS AND PAINT-SPATTERED SURFACES IMMEDIATELY BY PROPER METHODS OF WASHING AND SCRAPING, USING CARE NOT TO SCRATCH OR DAMAGE FINISHED SURFACES.
   15. AT COMPLETION OF WORK OF OTHER TRADES, TOUCH-UP AND RESTORE DAMAGED SURFACES OR DEFACED PAINTED SURFACES.

I. WALL COVERINGS:
   1. PROVIDE WALL COVERING AND ADHESIVE, AS RECOMMENDED BY MANUFACTURER, AS INDICATED IN FINISH SCHEDULE IN DRAWINGS.
   2. MAINTAIN FLAME SPREAD/SMOKE DEVELOPED INDEX OF 25/50 MAXIMUM, WHEN TESTED IN ACCORDANCE WITH ASTM E84.
   3. PROVIDE ADHESIVE AND FILLER MATERIALS, COMPLIANT WITH SUBSTRATE AND IN ACCORDANCE WITH MANUFACTURER'S RECOMMENDATIONS AS REQUIRED FOR A COMPLETE INSTALLATION.
   4. INSTALL WHEN SURFACE AND AMBIENT TEMPERATURES ARE WITHIN RANGES REQUIRED BY WALL COVERING AND ADHESIVE MANUFACTURERS.

DIVISION 10 - SPECIALTIES

A. CORNER GUARDS:
   1. PROVIDE SURFACE MOUNTED AND RECESSED CORNER GUARDS AS INDICATED ON DRAWINGS.
      a. SURFACE MOUNTED: SINGLE PIECE EXTRUDED AS MANUFACTURED BY KOROGARD WALL PROTECTION SYSTEMS. MODEL: G825; POLYVINYLCHLORIDE TEXTURED SURFACE, 2-1/2" WIDE, COLOR AS INDICATED ON DRAWINGS.
      b. RECESSED MOUNTED FOR HIGH TRAFFIC AREAS AS MANUFACTURED BY KOROGARD WALL PROTECTION SYSTEMS. MODEL R100; VINYL RADIUSED COVER OVER AN ALUMINUM RETAINER, 2" WIDE, COLOR AS INDICATED ON DRAWINGS.

B. TOILET ACCESSORIES
   1. GENERAL: PROVIDE TOILET ACCESSORIES AS REQUIRED FOR COMPLETE FINISHED INSTALLATION.
   2. CODES AND REGULATIONS: COMPLY WITH STATE AND FEDERAL REQUIREMENTS FOR ENSURING ACCESS FOR PERSONS WITH DISABILITIES.
   3. MANUFACTURERS: AS INDICATED ON DRAWINGS.
   4. ACCESSORIES AS INDICATED ON DRAWINGS: PROVIDE GRAB BARS WITH CONCEALED MOUNTING, SIZES AND SHAPES AN INDICATED AND AS REQUIRED BY APPLICABLE CODES AND REGULATIONS.
   5. MATERIALS: STAINLESS STEEL, ASTM A666, COMMERCIAL GRADE, TYPE 302/304, NUMBER 4 SATIN FINISH, SATIN CHROME ACCEPTABLE WHERE STAINLESS STEEL IS NOT AVAILABLE FOR ACCESSORY ITEM SCHEDULED. GAGES AS STANDARD WITH MANUFACTURER OF SPECIFIED ITEMS:
      a. FASTENERS, SCREWS AND BOLTS: HOT DIP GALVANIZED; AS RECOMMENDED BY ACCESSORY MANUFACTURER FOR COMPONENT AND SUBSTRATE.
      b. CONCEALED SURFACES: PRETREAT AND CLEAN, SPRAY APPLY ONE COAT PRIMER AND BAKED ENAMEL FINISH.
   6. EQUIPMENT: AS INDICATED ON DRAWING:
      a. GRAB BARS: STAINLESS STEEL TYPE 304 TO MEET REQUIREMENTS OF ASTM #F446-85.
   7. FABRICATION: WELD AND GRIND SMOOTH JOINTS OF FABRICATED COMPONENTS; FORM EXPOSED SURFACES FROM ONE SHEET OF STOCK, FREE OF JOINTS.
      a. FABRICATE UNITS WITH TIGHT SEAMS AND JOINTS, EXPOSED EDGES ROLLED; HANG DOORS AND ACCESS PANELS WITH CONTINUOUS PIANO HINGES; PROVIDE CONCEALED ANCHORAGE WHERE POSSIBLE.
      b. PROVIDE STEEL ANCHOR PLATES AND ANCHOR COMPONENTS FOR INSTALLATION.
      c. FORM SURFACES FLAT WITHOUT DISTORTION; MAINTAIN FLAT SURFACES WITHOUT SCRATCHES AND WITHOUT DENTS; FINISH EXPOSED EDGES EASED, FREE OF SHARP EDGES WHERE POTENTIAL EXISTING FOR PHYSICAL CONTACT.
      d. HOT DIP GALVANIZE FERROUS METAL ANCHORS AND FASTENING DEVICES.
      e. SHOP ASSEMBLE COMPONENTS; PACKAGE COMPLETE WITH ANCHORS AND FITTINGS.
   8. INSTALLATION: COMPLY WITH MANUFACTURER RECOMMENDATIONS AND APPLICABLE CODES AND REGULATIONS.

C. FIRE EXTINGUISHERS:
   1. GENERAL: PROVIDE PORTABLE, HAND-CARRIED FIRE EXTINGUISHERS AND MOUNTING BRACKETS FOR FIRE EXTINGUISHERS.
   2. NFPA COMPLIANCE: FABRICATE AND LABEL FIRE EXTINGUISHERS TO COMPLY WITH NFPA 10, "PORTABLE FIRE EXTINGUISHERS."
   3. FIRE EXTINGUISHERS: LISTED AND LABELED FOR TYPE, RATING, AND CLASSIFICATION BY AN INDEPENDENT TESTING AGENCY ACCEPTABLE TO AUTHORITIES HAVING JURISDICTION.
   4. MULTIPURPOSE DRY-CHEMICAL TYPE: UL-RATED NOMINAL CAPACITY, WITH MONOAMMONIUM PHOSPHATE-BASED DRY CHEMICAL IN MANUFACTURER'S STANDARD ENAMELED CONTAINER.
   5. MOUNTING BRACKETS: MANUFACTURER'S STANDARD STEEL, DESIGNED TO SECURE FIRE EXTINGUISHER TO WALL OR STRUCTURE, OF SIZES REQUIRED FOR TYPES AND CAPACITIES OF FIRE EXTINGUISHERS INDICATED, WITH RED BAKED-ENAMEL FINISH.
   6. INSTALL FIRE EXTINGUISHERS AND MOUNTING BRACKETS IN LOCATIONS INDICATED AND IN COMPLIANCE WITH REQUIREMENTS OF AUTHORITIES HAVING JURISDICTION.
      a. MOUNTING BRACKETS: 48" ABOVE FINISHED FLOOR TO TOP OF FIRE EXTINGUISHER.
   7. FIRE EXTINGUISHER CABINET
      a. FORMED PRIMED STEEL; 0.036" THICK BASE METAL.
      b. 0.036" DOOR, REINFORCED FOR RIGIDITY.
      c. CABINET FINISH: BAKED ENAMEL, WHITE ENAMEL OR AS SELECTED BY OWNER FROM STANDARD COLORS.

D. MOBILE / FIXED STORAGE SHELVING:
   1. GENERAL: PROVIDE MOVABLE AND FIXED COMPACT STORAGE SYSTEM; PROVIDE ACCESSORIES AS REQUIRED FOR COMPLETE FINISHED INSTALLATION.
   2. EXAMINATION: EXAMINE SUBSTRATES AND CONDITIONS UNDER WHICH COMPACTED STORAGE SYSTEM IS TO BE INSTALLED. DO NOT PROCEED WITH WORK UNTIL UNSATISFACTORY CONDITIONS HAVE BEEN CORRECTED.
   3. MANUFACTURER: PIPP
   4. INSTALL UNITS AND ACCESSORIES AT LOCATIONS SHOWN IN ACCORDANCE WITH MANUFACTURER'S RECOMMENDATIONS AND INSTRUCTIONS, LEVEL, PLUMB, SECURE AND AT PROPER HEIGHT. INSTALLATION LOCATION TO BE DETERMINED ON SITE BY OWNER REPRESENTATIVE.
   5. CLEANING: CLEAN UNITS AND REPAIR OR REPLACE DAMAGED UNITS AS DIRECTED BY PROJECT MANAGER. TOUCH-UP MARRED FINISHES OR REPLACE COMPONENT PARTS AS NECESSARY TO ELIMINATE EVIDENCE OF DAMAGE OR DETERIORATION.
   6. PROTECTION: PROVIDE PROTECTION FOR INSTALLED SYSTEM TO ENSURE PERFECT OPERATING CONDITION WITHOUT DAMAGE AT COMPLETION OF PROJECT.

DIVISION 12 - FURNISHINGS

A. GENERAL CONTRACTOR IS RESPONSIBLE FOR ASSEMBLY AND PLACEMENT OF OFFICE AND NON-SALES EQUIPMENT AND FURNITURE.
B. THE CONTRACTOR IS RESPONSIBLE TO UNCRATE, ASSEMBLE, AND PLACE TRADE FIXTURES AND PRESENTATION ITEMS IN SALES AREA; FIXTURES TO BE LOCATED PER THE DIRECTION OF THE OWNER.

ARCHITECTURAL SPECIFICATIONS

A

OWNER:

5A LANDS' END LANE
DODGEVILLE, WI 53595

ARCHITECT / ENGINEER:

SHREMSHOCK
Shremshock Architects, Inc.
7400 W. Campus Rd. Suite 150 New Albany, OH 43054
t: 614 545 4550 | f: 614 545 4555 | shremshock.com
Gerald S. Shremshock, Architect
Timothy J. Shremshock, Architect

©2019 THE ARCHITECT / ENGINEER ASSUMES NO RESPONSIBILITY OR LIABILITY FOR THE USE OF THESE PLANS FOR ANY PROJECT OTHER THAN SPECIFICALLY AUTHORIZED BY THEM AND SIGNED AND SEALED FOR SUCH SPECIFIC LOCATION IN THE STATE, PROVINCE OR TERRITORY SHOWN ON THE SEAL. THIS BUILDING USE IS ONLY APPLICABLE IN AREAS MEETING THE STATED DESIGN CRITERIA.

LANDS' END

STORE NO: TBD

PROJECT LOCATION:
CONGRESSIONAL PLAZA
1667 ROCKVILLE PIKE
SPACE #06
ROCKVILLE, MD 20852

DESIGN TYPE: -

REVISIONS:

REQUIRED BY:		DATE
1	CLIENT, LANDLORD & B.D. COMMENTS	07/19/2019

* INDICATES NO REVISION TO THIS SHEET

ARCHITECTURAL SPECIFICATIONS

Professional Certification

I certify that these documents were prepared or approved by me, and that I am a duly licensed architect under the laws of the State of Maryland license number 17246, expiration date February 28, 2021.

DRAWN BY: JAW CHECKED BY: BRW/ELM/RHW

DATE ISSUED: 06/07/2019

PROJECT NO: 190148

DRAWING NO: A15.1

1. ELECTRICAL SERVICE EQUIPMENT:
PROVIDE ELECTRICAL EQUIPMENT AS SHOWN ON RISER DIAGRAM SHEET E4.0. MAINTAIN CODE REQUIRED CLEARANCES FOR ALL EQUIPMENT PER NEC 110.26.

2. ~~BACKWRAP RECEPTACLE:~~
~~20 AMP, 120V, QUADRUPLEX RECEPTACLE AT BACKWRAP AT 18" A.F.F. LOCATE AS DIRECTED BY TENANT/ARCHITECT. CIRCUIT AS INDICATED. REFER TO CODED NOTE #13 FOR CONDUIT REQUIREMENTS.~~

3. ~~CASHWRAP DEDICATED RECEPTACLE:~~
~~20 AMP, 120V, DEDICATED CIRCUIT, QUADRUPLEX RECEPTACLE FOR EACH CASH REGISTER. LOCATE AS DIRECTED BY TENANT/ARCHITECT. CIRCUIT AS INDICATED BY CIRCUIT NUMBER ON RECEPTACLE. REFER TO CODED NOTE #12 FOR CONDUIT REQUIREMENTS.~~

4. ~~CASHWRAP TELEPHONE OUTLET:~~
~~TELEPHONE OUTLET FOR CASH REGISTER. USE 4" SQUARE BOX. PROVIDE CABLING. COORDINATE EXACT REQUIREMENTS/LOCATIONS WITH TENANT/ARCHITECT. REFER TO CODED NOTE #12 FOR CONDUIT REQUIREMENTS.~~

5. ~~CASHWRAP DATA OUTLET:~~
~~PROVIDE (4) FOUR DATA OUTLETS FOR EACH CASH REGISTER. USE 4" SQUARE BOX. PROVIDE CABLING. COORDINATE EXACT REQUIREMENTS/LOCATIONS WITH TENANT/ARCHITECT. REFER TO CODED NOTE #12 FOR CONDUIT REQUIREMENTS.~~

6. EXISTING TELEPHONE BOARD:
REPLACE EXISTING TELEPHONE BOARD DUPLEX RECEPTACLE WITH QUADRUPLEX RECEPTACLE. CIRCUIT AS INDICATED.

7. NETWORK RACK:
20 AMP, 120V, DEDICATED CIRCUIT, QUADRUPLEX RECEPTACLE AND DATA OUTLET INSTALLED DIRECTLY BELOW THE PLYWOOD FOR NETWORK RACK IN OFFICE. TELEPHONE BOARD MOUNTED AT 4'-0" TO BOTTOM. COORDINATE EXACT REQUIREMENTS WITH TENANT REPRESENTATIVE. DO NOT INSTALL RECEPTACLE CIRCUIT WITH ANY OTHER CIRCUITS.

8. CCTV RECEPTACLE:
20 AMP, 120V, DEDICATED CIRCUIT, DUPLEX RECEPTACLE FOR CCTV MONITOR/SECURITY SYSTEM. DO NOT INSTALL WITH ANY OTHER CIRCUITS. LOCATE ON WALL AT FIRST SHELF OVER MANAGERS COUNTER IN OPPOSITE CORNER AS MANAGER WORKSTATION PC.

9. SOUND SYSTEM:
20 AMP, 120V, DEDICATED CIRCUIT DUPLEX RECEPTACLE FOR SOUND SYSTEM. DO NOT INSTALL WITH ANY OTHER CIRCUITS.

10. SHOPPER TRACK:
EXACT LOCATION OF CEILING MOUNTED SHOPPER TRACK SENSOR SHALL BE DETERMINED BY VENDOR. BOTTOM OF JUNCTION BOX SHOULD BE NO MORE THAN 12" FROM THE FLOOR. PROVIDE 3/4" CONDUIT, BUSHINGS ON ENDS AND (2) CAT 6 CABLE (WITH 5" COILED AT EACH END) FROM OFFICE AREA TO WITHIN 2 FEET OF ENTRY DOORS. MARK CONDUIT AT OFFICE AREA 'SHOPPER TRACK'. GENERAL CONTRACTOR SHALL MARK LOCATIONS OF CONDUIT END POINTS ON AS-BUILTS.

11. WIRELESS ACCESS POINT (WAP) - OWNER PROVIDED:
PROVIDE 3/4" CONDUIT FROM EACH 'WAP' TO THE OFFICE AREA. PROVIDE CAT6 CABLING, INSTALL DEVICE, AND MAKE FINAL CONNECTIONS. MARK CONDUIT AT OFFICE AREA 'WAPT. ALIGN EACH 'WAP' WITH LIGHT FIXTURES AS INDICATED ON ARCHITECTURAL REFLECTED CEILING PLAN.

12. ~~CASHWRAP CONDUITS (SIX 1" CONDUITS):~~
- ~~ONE 1" CONDUIT FOR TELEPHONE CABLING.~~
- ~~TWO 1" CONDUIT (4 DATA CABLES IN EACH) FOR DATA CABLING.~~
- ~~TWO 1" CONDUIT FOR CASHWRAP RECEPTACLES.~~
- ~~TWO 1" SPARE CONDUITS WITH PULL STRING.~~

~~CONDUIT SHALL BE CONTINUOUS FROM CASHWRAP ACCESS AREA IN THE BOTTOM OF THE CASHWRAP BACK TO PANELBOARD OR OFFICE AREA. LABEL CONDUITS AT EACH END APPROPRIATELY. PULL CAT 6E CABLING (WITH 5' COILED AT EACH END) FOR TELEPHONE AND DATA. RUN FLEXIBLE METAL CONDUIT FROM POS TO POS. BY ACCESSIBLE MEANS. COORDINATE WITH LANDLORD PRIOR TO WORK COMMENCING.~~

13. ~~BACKWRAP CONDUIT (ONE 1" CONDUIT):~~
- ~~ONE 1" CONDUIT WITH J-BOX FOR DATA CABLING.~~
- ~~ONE 1" CONDUIT FOR BACKWRAP RECEPTACLE.~~

~~CONDUIT SHALL BE CONTINUOUS FROM BACKWRAP ACCESS AREA IN THE SIDEWALL OF THE BACKWRAP BACK TO THE PANELBOARD OR OFFICE AREA AS INDICATED. LABEL CONDUIT AT EACH END APPROPRIATELY. PULL CAT 6E CABLING (WITH 5' COILED AT EACH END) FOR TELEPHONE AND DATA. COORDINATE WITH LANDLORD PRIOR TO WORK COMMENCING. REFER TO DETAIL A/A10.4.~~

14. ~~UNDER FLOOR CONDUIT:~~
~~TRENCH EXISTING FLOOR FOR CONDUITS TO ALLOW CONDUIT TO BE EXTENDED FROM THE ACCESS PANEL AT THE BOTTOM OF THE CASHWRAP TO INSIDE NEAREST FULL HEIGHT WALL AT BACKWRAP AS INDICATED. TRENCH THEN PATCH FLOOR AS REQUIRED. GENERAL CONTRACTOR TO VERIFY WITH LANDLORD FLOOR TRENCH REQUIREMENTS PRIOR TO BID.~~

15. SHOW WINDOW RECEPTACLE - CEILING:
DUPLEX RECEPTACLES WITH "SF" DESIGNATION SHALL BE MOUNTED FLUSH IN CEILING WITHIN 18" OF STOREFRONT GLASS. REFER TO ARCHITECTURAL SHEETS FOR LOCATIONS. COORDINATE LOCATIONS WITH LOCAL ARCHITECTURAL ELEMENTS AND TRACK LIGHTS. HOMERUN CIRCUIT THROUGH CONTACTOR CONTROLLED BY TIME CLOCK. REFER TO LIGHTING CONTROL ON SHEET E3.0.

16. SALES FLOOR DUPLEX GENERAL RECEPTACLE:
RECEPTACLE TO BE CENTERED BETWEEN EDGE OF WALLS/CABINETS/ETC. LOCATIONS ARE TO BE CONFIRMED WITH TENANT'S REPRESENTATIVE PRIOR TO INSTALLATION.

17. CCTV SYSTEM:
COORDINATE WITH CCTV SYSTEM VENDOR/SHOP DRAWINGS AND PROVIDE 3/4" EMT PENDANT CONDUIT FROM STRUCTURE FOR SECURITY CAMERA (DOME). BOTTOM OF CONDUIT SHALL BE MOUNTED LEVEL TO BOTTOM OF LIGHT FIXTURE IN DECK/OPEN AREAS. CCTV CABLE SHALL BE DROPPED INTO CONDUIT WITH SERVICE LOOP ABOVE. IN HARD CEILING AREA CCTV CABLE SHALL BE LEFT AT EDGE OF SHEET ROCK FOR CCTV VENDOR TO INSTALL IN HARD CEILING. ALL CCTV CABLE SHOULD EXIT WALL IN MANAGERS OFFICE ON FIRST SHELF OVER COUNTER ON OPPOSITE END AS MANAGERS WORKSTATION PC. LOW VOLTAGE VENDOR WILL PROVIDE ADDITIONAL DATA DROP IN SAME LOCATION ON SHELF. LOW VOLTAGE VENDOR WILL INSTALL ALL CCTV CABLES. CLIENT VENDOR WILL TERMINATE ALL CAT6 CCTV CABLING IN OFFICE PER RESPONSIBILITY SCHEDULE. CCTV EQUIPMENT WILL BE MOUNTED ON FIRST SHELF OVER MANAGERS COUNTER IN OPPOSITE CORNER AS MANAGERS WORKSTATION PC.

18. TELEPHONE CONDUIT:
EXISTING TELEPHONE CONDUIT FROM TELEPHONE ROOM TO THIS SPACE. EXTEND TO OFFICE AREA. TELEPHONE COMPANY TO MAKE ACTUAL CONNECTION.

19. EXISTING ELECTRIC WATER HEATER:
EXISTING 20A/1P MOTOR-RATED SWITCH FOR WATER HEATER (1.65 KW, 120V/1PH). REFER TO MECHANICAL EQUIPMENT FEEDER/CONNECTION SCHEDULE ON SHEET E4.0.

20. DELIVERY BUZZER SYSTEM:
INSTALL A DELIVERY BUZZER SYSTEM AS SHOWN, INCLUDING EDWARDS #852 PUSH-BUTTON AT REAR AND FRONT DOORS, #592 TRANSFORMERS AND #660 BUZZERS AS INDICATED. COORDINATE ALL REQUIREMENTS WITH TENANT AS TO LOCATIONS AND QUANTITIES PRIOR TO BIDDING. REFER TO SHEET E3.0 FOR ADDITIONAL INFORMATION.

21. SOUND SYSTEM:
COORDINATE WITH SOUND SYSTEM VENDOR/SHOP DRAWINGS TO BE PROVIDED LATER AND PROVIDE JUNCTION BOXES SUSPENDED FROM STRUCTURE BY 3/4" CONDUIT. SEPARATELY DAISY CHAIN SPEAKER CONDUIT ROUTES BACK TO (2) VOLUME CONTROL JUNCTION BOXES AT OFFICE AREA. GENERAL CONTRACTOR TO PROVIDE JUNCTION BOXES, CONDUIT, AND SUPPORTS FOR SAME. OWNERS VENDOR TO PROVIDE AND TERMINATE ALL SPEAKER WIRING (16/2 PLENUM RATED EQUAL TO BELDEN #6200-UE).

22. SECURITY KEYPAD:
PROVIDE JUNCTION BOX AT 48" A.F.F. AND 1/2" CONDUIT WITH 18/4 PLENUM RATED CABLE EQUAL TO BELDEN #82489 TO OFFICE AREA.

23. HVAC RECEPTACLE:
PROVIDE GFI DUPLEX RECEPTACLE ADJACENT TO UNIT IF NOT EXISTING AND PROVIDE CIRCUIT AS INDICATED. FURNISH WEATHER PROOF ENCLOSURES AND COVERS IF NOT EXISTING OR BROKEN.

24. MECHANICAL EQUIPMENT CONNECTIONS:
PROVIDE FEEDERS AND DISCONNECTS PER MECHANICAL EQUIPMENT FEEDER/CONNECTION SCHEDULE ON SHEET E4.0.

25. HVAC THERMOSTATS/SENSORS:
THERMOSTAT/SENSOR LOCATIONS TO BE COORDINATED WITH TENANT. PROVIDE 4" SQUARE BACKBOX, SINGLE GANG PLASTER RING AND 1/2" CONDUIT WITH PULL STRING BETWEEN THERMOSTAT/SENSOR LOCATION AND HVAC UNIT IT SERVES.

26. DUCT SMOKE DETECTOR/REMOTE TEST STATION:
GENERAL CONTRACTOR TO PROVIDE DUCT MOUNTED SMOKE DETECTOR AND MECHANICAL CONTRACTOR TO INSTALL IN DUCTWORK. GENERAL CONTRACTOR, UTILIZING MALL APPROVED FIRE ALARM CONTRACTOR SHALL INTERLOCK SMOKE DETECTOR WITH HVAC UNIT AND PROVIDE REMOTE TEST ALARM STATION. MAKE ALL FINAL CONNECTIONS AS REQUIRED FOR A COMPLETE SYSTEM. HVAC UNIT TO SHUT DOWN UPON ACTIVATION OF SMOKE DETECTOR. COORDINATE WITH LANDLORD TO AVOID CONFLICTS IN FIELD.

27. INSTALL HORIZONTALLY AT 26" A.F.F. REFER TO ARCHITECTURAL SHEET A7.1, DETAIL 'C'.

28. ~~BACKWRAP DATA OUTLETS:~~
~~PROVIDE J-BOX WITH 2-PORT FACEPLATE AND CABLING FOR DATA OUTLET AT BACKWRAP AT 18" A.F.F. TENANT'S VENDOR TO MAKE FINAL CONNECTION. CONFIRM EXACT REQUIREMENTS/LOCATIONS WITH TENANT PM. REFER TO CODED NOTE #13 FOR CONDUIT REQUIREMENTS.~~

29. FIRE ALARM BOOSTER PANEL (FABP):
EXISTING FIRE ALARM BOOSTER PANEL TO REMAIN. MARSHALL ALL TENANT SPACE FIRE ALARM DEVICES AT THIS LOCATION INTERCONNECT TO LANDLORDS MAIN FIRE ALARM SYSTEM. FIELD VERIFY EXACT LOCATION AND REQUIREMENTS. REFER TO FIRE ALARM DETAIL ON SHEET E4.0 FOR ADDITIONAL INFORMATION.

30. ~~FIRE ALARM HORN/STROBE:~~
~~RELOCATE (R) FIRE ALARM HORN/STROBE AS INDICATED. CONNECT TO FIRE ALARM JUNCTION BOX. FIELD VERIFY EXACT LOCATION AND REQUIREMENTS. 'C' INDICATED DEVICE IS TO BE CEILING MOUNTED AND 'S' INDICATED DEVICE IS TO BE SUSPENDED FROM STRUCTURE WITH JUNCTION BOX AND CONDUIT. REFER TO FIRE ALARM DETAIL ON SHEET E4.0 FOR ADDITIONAL INFORMATION.~~

31. ~~FIRE ALARM STROBE:~~
~~RELOCATE (R) EXISTING FIRE ALARM HORN/STROBE AS INDICATED. CONNECT TO FIRE ALARM JUNCTION BOX. FIELD VERIFY EXACT LOCATION AND REQUIREMENTS. 'C' INDICATED DEVICE IS TO BE CEILING MOUNTED AND 'S' INDICATED DEVICE IS TO BE SUSPENDED FROM STRUCTURE WITH JUNCTION BOX AND CONDUIT. REFER TO FIRE ALARM DETAIL ON SHEET E4.0 FOR ADDITIONAL INFORMATION.~~

32. ~~FIRE PROTECTION SYSTEM VALVE ALARM DEVICES:~~
~~EXISTING FIRE PROTECTION ZONE VALVE TAMPER AND WATER FLOW SWITCHES TO REMAIN. FIELD VERIFY EXACT LOCATION AND REQUIREMENTS.~~

33. OFFICE DESK RECEPTACLE/DATA OUTLETS:
PROVIDE DEDICATED QUADRUPLEX RECEPTACLES AND J-BOX WITH 3-PORT FACEPLATE AND CABLING FOR DATA OUTLET AT OFFICE DESK. TENANT'S VENDOR TO MAKE FINAL CONNECTION FOR DATA SERVICE. CONFIRM EXACT REQUIREMENTS/LOCATIONS WITH TENANT PM.

34. ~~RECEPTACLE IS TO BE CONTROLLED BY ROOM LIGHTING OCCUPANCY SENSOR FOR ENERGY CODE CONTROL COMPLIANCE. ROUTE THROUGH LUTRON #RMJ-H2R-DV-B POWPAK RELAY MODULE SYNCED WITH OCCUPANCY SENSOR. REFER TO SHEET E2.0 FOR OCCUPANCY SENSOR AND CIRCUITING. LABEL RECEPTACLE PER NEC.~~

35. ~~PROVIDE DUPLEX RECEPTACLE, DATA OUTLET, CONDUIT AND WIRE FOR DEDICATED VIDEO AND POWER CIRCUITS TO VIDEO WALL. REFER TO SHEET E3.0 FOR DETAILS OF INSTALLATION AND COORDINATE WITH ARCHITECTURAL SHEETS.~~

36. MOUNT HERITAGE ARCH GENERAL PURPOSE RECEPTACLES AT 15" A.F.F. IN HORIZONTAL ORIENTATION.

37. ~~FIRE ALARM MANUAL PULL STATION:~~
~~PROVIDE OR RELOCATE EXISTING (E) FIRE ALARM MANUAL PULL STATION. AND RECONNECTED TO LANDLORD FIRE ALARM SYSTEM. FIELD VERIFY EXACT LOCATION AND REQUIREMENTS. REFER TO F.A. DETAIL ON E4.0.~~

38. ~~PROVIDE CAT 6E CABLING FROM OFFICE AREA TO JUNCTION BOX. LEAVE 5' COILED AT TELEPHONE BOARD END AND 15' COILED AT JUNCTION BOX END. CABLE CONTINUATION AND TERMINATIONS AT FUTURE DEVICE BY OWNERS VENDOR.~~

39. DISPLAY WALL CONDUITS (TWO 1" CONDUITS):
- ONE 1" CONDUIT WITH J-BOX FOR DATA CABLING.
- ONE 1" CONDUIT FOR DISPLAY WALL RECEPTACLE.

CONDUIT SHALL BE CONTINUOUS FROM DISPLAY WALL BACK TO PANELBOARD OR OFFICE AREA. LABEL CONDUITS AT EACH END APPROPRIATELY. PULL CAT 6 CABLING (WITH 5' COILED AT EACH END) FOR DATA. COORDINATE WITH LANDLORD PRIOR TO WORK COMMENCING. REFER TO DETAILS J/A10.4 AND M/A10.4

40. NOT USED

41. NOT USED

42. AIR CURTAIN 'AC-1' AT FRONT DOOR IS TO BE INTERLOCKED WITH DOOR CONTACTS SO THAT AIR CURTAIN OPERATES ONLY WHEN DOOR IS OPEN. E.C. SHALL RUN 3/4" CONDUIT AND SPEED AND HEAT CONTROL WIRING FROM UNIT TO SPEED AND HEAT CONTROL SWITCHES IN OFFICE. REFER TO MECHANICAL SHEETS FOR ADDITIONAL INFORMATION.

43. PROVIDE RECEPTACLE ON DEDICATED CIRCUIT AS INDICATED FOR SALES FLOOR "STEAMERS".

44. NOT USED

45. SMOKE DETECTOR:
FIRE ALARM SMOKE DETECTOR. VERIFY EXISTING OR PROVIDE AND CONNECT TO EXISTING FIRE ALARM BOOSTER PANEL (FABP). FIELD VERIFY EXACT LOCATION AND REQUIREMENTS. 'C' INDICATED DEVICE IS TO BE CEILING MOUNTED WITH JUNCTION BOX AND CONDUIT. REFER TO FIRE ALARM DETAIL ON SHEET E4.0.

46. ~~PROVIDE RECEPTACLE AND MOUNT OMNI DIRECTIONAL ANTENNA AT HEIGHT AND GENERAL LOCATION AS INDICATED. PROVIDE JUNCTION BOX AND CONDUIT WITH PULL STRING ROUTED TO OFFICE IN LOWER LEVEL. OWNER'S LOW VOLTAGE VENDOR TO PROVIDE CAT6 CABLE (AND RACEWAY WHERE REQUIRED) BETWEEN ANTENNA AND NETWORK RACK.~~

47. PROVIDE BACKBOXES FOR TWO (2) VOLUME CONTROLS, ONE (1) FOR SALES RETAIL FLOOR SPEAKERS, AND ONE (1) FOR FITTING ROOM SPEAKERS AT OFFICE DESK ADJACENT TO SOUND SYSTEM (AMPLIFIER AND AUDIO SOURCE) EQUIPMENT. COORDINATE WITH AUDIO VENDOR AND OWNER FOR EXACT LOCATIONS AND SPECIFICATIONS.

48. PROVIDE IN-WALL JUNCTION BOX FOR DIRECT CONNECTION TO HAND DRYER (RATED 1500W, 13.6A, 120V)

POWER PLAN CODED NOTES

D

1. DESIGN DRAWINGS ARE SCHEMATIC. THE CONTRACTOR SHALL VISIT THE SITE PRIOR TO BIDDING OR AWARD OF CONTRACT TO INSPECT EXISTING FIELD CONDITIONS. THE CONTRACTOR SHALL INCLUDE ALL LABOR AND MATERIALS NECESSARY FOR FIELD MODIFICATIONS DUE TO EXISTING CONDITIONS.

2. THE CONTRACTOR SHALL CONTACT THE ARCHITECT, ENGINEER OR TENANT PRIOR TO BIDDING FOR INTERPRETATIONS AND CLARIFICATIONS OF THE DESIGN AND INCLUDE IN THIS BID ALL COSTS TO MEET THE DESIGN INTENT. CLARIFICATIONS MADE BY THE ARCHITECT, ENGINEER OR TENANT AFTER BIDDING WILL BE FINAL AND SHALL BE IMPLEMENTED AT THE CONTRACTORS COST.

3. BIDDING CONTRACTORS SHALL HAVE A WORKING KNOWLEDGE OF LOCAL CODES AND ORDINANCES AND SHALL INCLUDE IN THEIR BIDS THE COSTS FOR ALL WORK INSTALLED IN STRICT ACCORDANCE WITH GOVERNING CODES, THE PLANS AND SPECIFICATIONS NOT WITHSTANDING. THE CONTRACTOR SHALL ALERT ARCHITECT, ENGINEER OR TENANT OF ANY APPARENT DISCREPANCIES BETWEEN GOVERNING CODES AND DESIGN INTENT.

4. REFER TO MECHANICAL PLAN FOR LOCATION OF MECHANICAL EQUIPMENT. FIELD VERIFY EXACT LOCATIONS. PROVIDE ALL CONVENIENCE RECEPTACLES, SAFETY SWITCHES, WIRING, OR OTHER EQUIPMENT TO ENSURE A COMPLETE AND OPERABLE HVAC SYSTEM.

5. ALL CEILING MOUNTED RECEPTACLES AND COVERPLATES IN WHITE CEILING SHALL BE WHITE.

6. ALL WALL MOUNTED RECEPTACLES, SWITCHES, AND COVERPLATES SHALL BE WHITE.

7. CONDUIT FOR DATA/TELEPHONE OUTLETS AND LOW VOLTAGE CABLING SHALL HAVE A PULL/JUNCTION BOX INSTALLED AFTER EACH SET OF THREE 90 DEGREE BENDS.

8. LABEL ALL COVERPLATES ON INSIDE FACE OF PLATE WITH CIRCUIT NUMBER AND PANEL DESIGNATION. I.E. 'A-1'. CIRCUIT SHALL BE WRITTEN WITH PERMANENT MARKER IN A CONTRASTING COLOR.

9. CONDUIT FOR SPEAKER, TELEPHONE AND DATA CABLING FROM CASHWRAP SHALL STUB OUT ABOVE THE CEILING WITH A BUSHING TO PROTECT THE CABLE FROM THE EDGES OF THE CONDUIT AND NOT BE EXPOSED ON THE SALES FLOOR

10. ALL HORIZONTAL CABLING FOR VOICE AND DATA SHALL BE CATEGORY 6 RATED, UNLESS OTHERWISE NOTED.

11. PROVIDE ALL BACKBOXES AND CONDUIT FOR THE COMMUNICATIONS OUTLETS.

12. ALL CABLES AND DEVICES TO BE INSTALLED ABOVE FINISHED CEILING SHALL BE PLENUM RATED OR IN CONDUIT.

13. REFER TO SPECIFICATIONS SECTION 26 27 26 WIRING DEVICES, FOR EXACT MODEL NUMBER OF DEVICES TO BE USED.

14. FIELD VERIFY ALL CONDITIONS.

15. FIRE ALARM PLANS MUST BE ENGINEERED AND WET SIGNED AND SEALED BY A LANDLORD APPROVED, LICENSED, REGISTERED FIRE ALARM CONTRACTOR IN THE LOCAL JURISDICTION. GENERAL CONTRACTOR SHALL FIELD VERIFY AND COORDINATE REQUIREMENTS WITH LANDLORD PRIOR TO BID AND INCLUDE THE COST OF THIS WORK IN THIS BID.

16. OWNER TO TERMINATE ALL NETWORK CABLING TO DEVICES.

POWER PLAN GENERAL NOTES

D

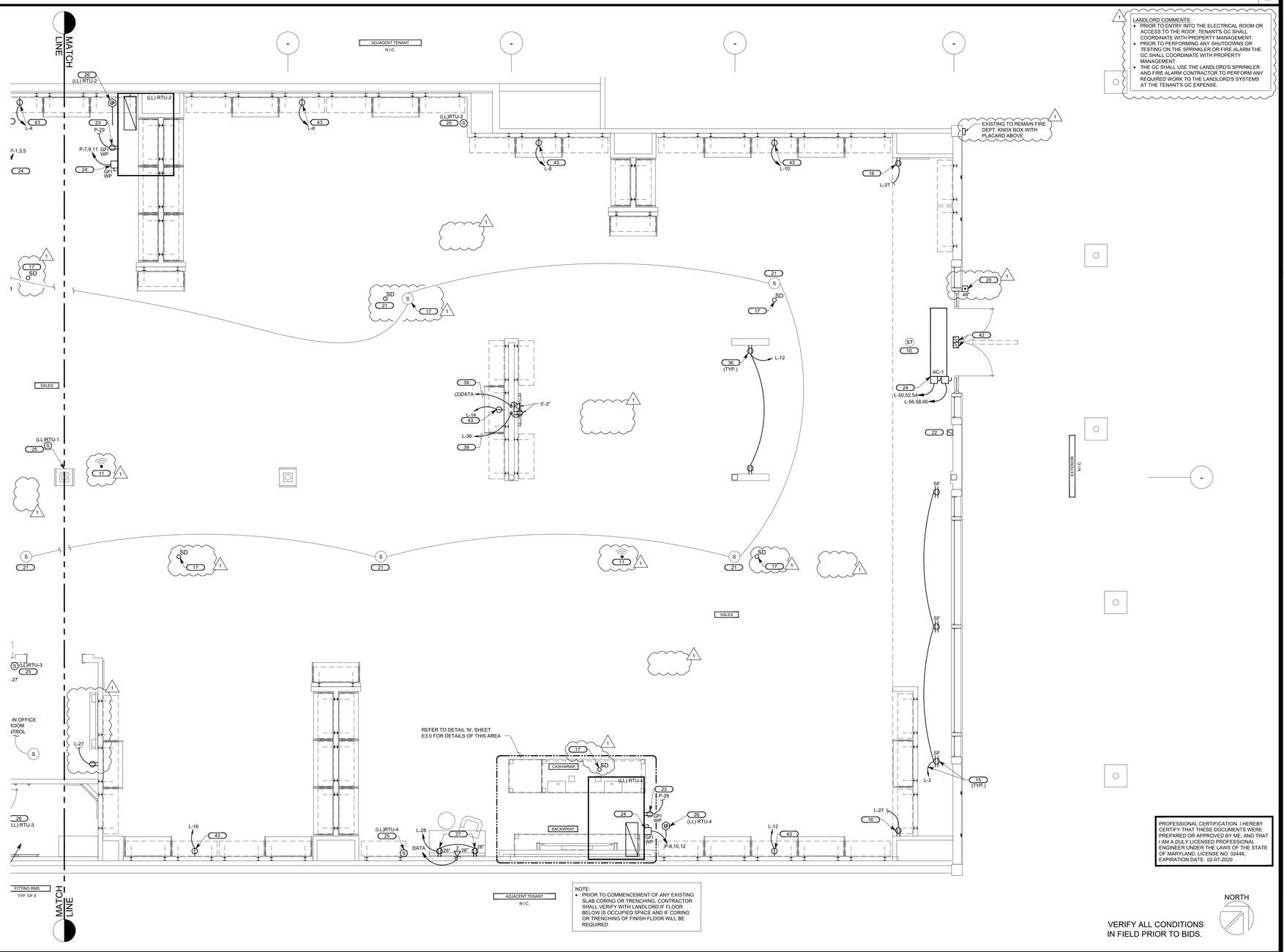

PROFESSIONAL CERTIFICATION. I HEREBY CERTIFY THAT THESE DOCUMENTS WERE PREPARED OR APPROVED BY ME, AND THAT I AM A DULY LICENSED PROFESSIONAL ENGINEER UNDER THE LAWS OF THE STATE OF MARYLAND. LICENSE NO. 32448, EXPIRATION DATE: 02-07-2020 .

VERIFY ALL CONDITIONS IN FIELD PRIOR TO BIDS.

ELECTRICAL POWER PLAN

1/4"=1'-0"
-
A

OWNER:
5A LANDS' END LANE
DODGEVILLE, WI 53595

ARCHITECT / ENGINEER:
SHREMSHOCK
Shremshock Engineering, Inc.
7400 W. Campus Rd. Suite 150 New Albany, OH 43054
t: 614 545 4550 | f: 614 545 4555 | shremshock.com

©2019 THE ARCHITECT / ENGINEER ASSUMES NO RESPONSIBILITY FOR THE USE OF THESE PLANS FOR ANY PROJECT OTHER THAN SPECIFICALLY AUTHORIZED BY THEM AND SIGNED AND SEALED FOR SUCH SPECIFIC LOCATION IN THE STATE, PROVINCE OR TERRITORY SHOWN ON THE SEAL. THIS BUILDING USE IS ONLY APPLICABLE IN AREAS MEETING THE STATED DESIGN CRITERIA.

LANDS' END

STORE NO:
TBD

PROJECT LOCATION:
CONGRESSIONAL PLAZA
1667 ROCKVILLE PIKE
SPACE #06
ROCKVILLE, MD 20852

DESIGN TYPE:
-

REVISIONS:

REQUIRED BY:		DATE
1	TAV CLIENT, LANDLORD & B.D. COMMENTS	07/19/2019

* INDICATES NO REVISION TO THIS SHEET

ELECTRICAL POWER PLAN

DRAWN BY: TAV CHECKED BY: RAP

DATE ISSUED: 06/07/2019
PROJECT NO: 190148
DRAWING NO:
E1.0

1. ELECTRICAL SERVICE EQUIPMENT:
PROVIDE ELECTRICAL EQUIPMENT AS SHOWN ON RISER DIAGRAM SHEET E4.0. MAINTAIN CODE REQUIRED CLEARANCES FOR ALL EQUIPMENT PER NEC 110.26.

2. ~~BACKWRAP RECEPTACLE:~~
~~20 AMP, 120V, QUADRUPLEX RECEPTACLE AT BACKWRAP AT 18" A.F.F. LOCATE AS DIRECTED BY TENANT/ARCHITECT. CIRCUIT AS INDICATED. REFER TO CODED NOTE #13 FOR CONDUIT REQUIREMENTS.~~

3. ~~CASHWRAP DEDICATED RECEPTACLE:~~
~~20 AMP, 120V, DEDICATED CIRCUIT, QUADRUPLEX RECEPTACLE FOR EACH CASH REGISTER. LOCATE AS DIRECTED BY TENANT/ARCHITECT. CIRCUIT AS INDICATED BY CIRCUIT NUMBER ON RECEPTACLE. REFER TO CODED NOTE #12 FOR CONDUIT REQUIREMENTS.~~

4. ~~CASHWRAP TELEPHONE OUTLET:~~
~~TELEPHONE OUTLET FOR CASH REGISTER. USE 4" SQUARE BOX. PROVIDE CABLING. COORDINATE EXACT REQUIREMENTS/LOCATIONS WITH TENANT/ARCHITECT. REFER TO CODED NOTE #12 FOR CONDUIT REQUIREMENTS.~~

5. ~~CASHWRAP DATA OUTLET:~~
~~PROVIDE (4) FOUR DATA OUTLETS FOR EACH CASH REGISTER. USE 4" SQUARE BOX. PROVIDE CABLING. COORDINATE EXACT REQUIREMENTS/LOCATIONS WITH TENANT/ARCHITECT. REFER TO CODED NOTE #12 FOR CONDUIT REQUIREMENTS.~~

6. EXISTING TELEPHONE BOARD:
REPLACE EXISTING TELEPHONE BOARD DUPLEX RECEPTACLE WITH QUADRUPLEX RECEPTACLE. CIRCUIT AS INDICATED.

7. NETWORK RACK:
20 AMP, 120V, DEDICATED CIRCUIT, QUADRUPLEX RECEPTACLE AND DATA OUTLET INSTALLED DIRECTLY BELOW THE PLYWOOD FOR NETWORK RACK IN OFFICE. TELEPHONE BOARD MOUNTED AT 4'-0" TO BOTTOM. COORDINATE EXACT REQUIREMENTS WITH TENANT REPRESENTATIVE. DO NOT INSTALL RECEPTACLE CIRCUIT WITH ANY OTHER CIRCUITS.

8. CCTV RECEPTACLE:
20 AMP, 120V, DEDICATED CIRCUIT, DUPLEX RECEPTACLE FOR CCTV MONITOR/SECURITY SYSTEM. DO NOT INSTALL WITH ANY OTHER CIRCUITS. LOCATE ON WALL AT FIRST SHELF OVER MANAGERS COUNTER IN OPPOSITE CORNER AS MANAGER WORKSTATION PC.

9. SOUND SYSTEM:
20 AMP, 120V, DEDICATED CIRCUIT DUPLEX RECEPTACLE FOR SOUND SYSTEM. DO NOT INSTALL WITH ANY OTHER CIRCUITS.

10. SHOPPER TRACK:
EXACT LOCATION OF CEILING MOUNTED SHOPPER TRACK SENSOR SHALL BE DETERMINED BY VENDOR. BOTTOM OF JUNCTION BOX SHOULD BE NO MORE THAN 12" FROM THE FLOOR. PROVIDE 3/4" CONDUIT, BUSHINGS ON ENDS AND (2) CAT 6 CABLE (WITH 5' COILED AT EACH END) FROM OFFICE AREA TO WITHIN 2 FEET OF ENTRY DOORS. MARK CONDUIT AT OFFICE AREA 'SHOPPER TRACK'. GENERAL CONTRACTOR SHALL MARK LOCATIONS OF CONDUIT END POINTS ON AS-BUILTS.

11. WIRELESS ACCESS POINT (WAP) - OWNER PROVIDED:
PROVIDE 3/4" CONDUIT FROM EACH 'WAP' TO THE OFFICE AREA. PROVIDE CAT6 CABLING, INSTALL DEVICE, AND MAKE FINAL CONNECTIONS. MARK CONDUIT AT OFFICE AREA 'WI-FI'. ALIGN EACH 'WAP' WITH LIGHT FIXTURES AS INDICATED ON ARCHITECTURAL REFLECTED CEILING PLAN.

12. ~~CASHWRAP CONDUITS (SIX 1" CONDUITS):~~
- ~~ONE 1" CONDUIT FOR TELEPHONE CABLING.~~
- ~~TWO 1" CONDUIT (4 DATA CABLES IN EACH) FOR DATA CABLING.~~
- ~~TWO 1" CONDUIT FOR CASHWRAP RECEPTACLES.~~
- ~~TWO 1" SPARE CONDUITS WITH PULL STRING.~~

~~CONDUIT SHALL BE CONTINUOUS FROM CASHWRAP ACCESS AREA IN THE BOTTOM OF THE CASHWRAP BACK TO PANELBOARD OR OFFICE AREA. LABEL CONDUITS AT EACH END APPROPRIATELY. PULL CAT 6E CABLING (WITH 5' COILED AT EACH END) FOR TELEPHONE AND DATA. RUN FLEXIBLE METAL CONDUIT FROM POS TO POS. BY ACCESSIBLE MEANS. COORDINATE WITH LANDLORD PRIOR TO WORK COMMENCING.~~

13. ~~BACKWRAP CONDUIT (ONE 1" CONDUIT):~~
- ~~ONE 1" CONDUIT WITH J-BOX FOR DATA CABLING.~~
- ~~ONE 1" CONDUIT FOR BACKWRAP RECEPTACLE.~~

~~CONDUIT SHALL BE CONTINUOUS FROM BACKWRAP ACCESS AREA IN THE SIDEWALL OF THE BACKWRAP BACK TO THE PANELBOARD OR OFFICE AREA AS INDICATED. LABEL CONDUIT AT EACH END APPROPRIATELY. PULL CAT 6E CABLING (WITH 5' COILED AT EACH END) FOR TELEPHONE AND DATA. COORDINATE WITH LANDLORD PRIOR TO WORK COMMENCING. REFER TO DETAIL A/A10.4.~~

14. ~~UNDER FLOOR CONDUIT:~~
~~TRENCH EXISTING FLOOR FOR CONDUITS TO ALLOW CONDUIT TO BE EXTENDED FROM THE ACCESS PANEL AT THE BOTTOM OF THE CASHWRAP TO INSIDE NEAREST FULL HEIGHT WALL AT BACKWRAP AS INDICATED. TRENCH THEN PATCH FLOOR AS REQUIRED. GENERAL CONTRACTOR TO VERIFY WITH LANDLORD FLOOR TRENCH REQUIREMENTS PRIOR TO BID.~~

15. SHOW WINDOW RECEPTACLE - CEILING:
DUPLEX RECEPTACLES WITH "SF" DESIGNATION SHALL BE MOUNTED FLUSH IN CEILING WITHIN 18" OF STOREFRONT GLASS. REFER TO ARCHITECTURAL SHEETS FOR LOCATIONS. COORDINATE LOCATIONS WITH LOCAL ARCHITECTURAL ELEMENTS AND TRACK LIGHTS. HOMERUN CIRCUIT THROUGH CONTACTOR CONTROLLED BY TIME CLOCK. REFER TO LIGHTING CONTROL ON SHEET E3.0.

16. SALES FLOOR DUPLEX GENERAL RECEPTACLE:
RECEPTACLE TO BE CENTERED BETWEEN EDGE OF WALLS/CABINETS/ETC. LOCATIONS ARE TO BE CONFIRMED WITH TENANT'S REPRESENTATIVE PRIOR TO INSTALLATION.

17. CCTV SYSTEM:
COORDINATE WITH CCTV SYSTEM VENDOR/SHOP DRAWINGS AND PROVIDE 3/4" EMT PENDANT CONDUIT FROM STRUCTURE FOR SECURITY CAMERA (DOME). BOTTOM OF CONDUIT SHALL BE MOUNTED LEVEL TO BOTTOM OF LIGHT FIXTURE IN DECK/OPEN AREAS. CCTV CABLE SHALL BE DROPPED INTO CONDUIT WITH SERVICE LOOP ABOVE. IN HARD CEILING AREA CCTV CABLE SHALL BE LEFT AT EDGE OF SHEET ROCK FOR CCTV VENDOR TO INSTALL IN HARD CEILING. ALL CCTV CABLE SHOULD EXIT WALL IN MANAGERS OFFICE ON FIRST SHELF OVER COUNTER ON OPPOSITE END AS MANAGERS WORKSTATION PC. LOW VOLTAGE VENDOR WILL PROVIDE ADDITIONAL DATA DROP IN SAME LOCATION ON SHELF. LOW VOLTAGE VENDOR WILL INSTALL ALL CCTV CABLES. CLIENT VENDOR WILL TERMINATE ALL CATE CCTV CABLING IN OFFICE PER RESPONSIBILITY SCHEDULE. CCTV EQUIPMENT WILL BE MOUNTED ON FIRST SHELF OVER MANAGERS COUNTER IN OPPOSITE CORNER AS MANAGERS WORKSTATION PC.

18. TELEPHONE CONDUIT:
EXISTING TELEPHONE CONDUIT FROM TELEPHONE ROOM TO THIS SPACE. EXTEND TO OFFICE AREA. TELEPHONE COMPANY TO MAKE ACTUAL CONNECTION.

19. EXISTING ELECTRIC WATER HEATER:
EXISTING 20A/1P MOTOR-RATED SWITCH FOR WATER HEATER (1.65 KW, 120V/1PH). REFER TO MECHANICAL EQUIPMENT FEEDER/CONNECTION SCHEDULE ON SHEET E4.0.

20. DELIVERY BUZZER SYSTEM:
INSTALL A DELIVERY BUZZER SYSTEM AS SHOWN, INCLUDING EDWARDS #852 PUSH-BUTTON AT REAR AND FRONT DOORS, #592 TRANSFORMERS AND #660 BUZZERS AS INDICATED. COORDINATE ALL REQUIREMENTS WITH TENANT AS TO LOCATIONS AND QUANTITIES PRIOR TO BIDDING. REFER TO SHEET E3.0 FOR ADDITIONAL INFORMATION.

21. SOUND SYSTEM:
COORDINATE WITH SOUND SYSTEM VENDOR/SHOP DRAWINGS TO BE PROVIDED LATER AND PROVIDE JUNCTION BOXES SUSPENDED FROM STRUCTURE BY 3/4" CONDUIT. SEPARATELY DAISY CHAIN SPEAKER CONDUIT ROUTES BACK TO (2) VOLUME CONTROL JUNCTION BOXES AT OFFICE AREA. GENERAL CONTRACTOR TO PROVIDE JUNCTION BOXES, CONDUIT, AND SUPPORTS FOR SAME. OWNERS VENDOR TO PROVIDE AND TERMINATE ALL SPEAKER WIRING (16/2 PLENUM RATED EQUAL TO BELDEN #6200-UE).

22. SECURITY KEYPAD:
PROVIDE JUNCTION BOX AT 48" A.F.F. AND 1/2" CONDUIT WITH 18/4 PLENUM RATED CABLE EQUAL TO BELDEN #82489 TO OFFICE AREA.

23. HVAC RECEPTACLE:
PROVIDE GFI DUPLEX RECEPTACLE ADJACENT TO UNIT IF NOT EXISTING AND PROVIDE CIRCUIT AS INDICATED. FURNISH WEATHER PROOF ENCLOSURES AND COVERS IF NOT EXISTING OR BROKEN.

24. MECHANICAL EQUIPMENT CONNECTIONS:
PROVIDE FEEDERS AND DISCONNECTS PER MECHANICAL EQUIPMENT FEEDER/CONNECTION SCHEDULE ON SHEET E4.0.

25. HVAC THERMOSTATS/SENSORS:
THERMOSTAT/SENSOR LOCATIONS TO BE COORDINATED WITH TENANT. PROVIDE 4" SQUARE BACKBOX, SINGLE GANG PLASTER RING AND 1/2" CONDUIT WITH PULL STRING BETWEEN THERMOSTAT/SENSOR LOCATION AND HVAC UNIT IT SERVES.

26. DUCT SMOKE DETECTOR/REMOTE TEST STATION:
GENERAL CONTRACTOR TO PROVIDE DUCT MOUNTED SMOKE DETECTOR AND MECHANICAL CONTRACTOR TO INSTALL IN DUCTWORK. GENERAL CONTRACTOR, UTILIZING MALL APPROVED FIRE ALARM CONTRACTOR SHALL INTERLOCK SMOKE DETECTOR WITH HVAC UNIT AND PROVIDE REMOTE TEST ALARM STATION. MAKE ALL FINAL CONNECTIONS AS REQUIRED FOR A COMPLETE SYSTEM. HVAC UNIT TO SHUT DOWN UPON ACTIVATION OF SMOKE DETECTOR. COORDINATE WITH LANDLORD TO AVOID CONFLICTS IN FIELD.

27. INSTALL HORIZONTALLY AT 26" A.F.F. REFER TO ARCHITECTURAL SHEET A7.1, DETAIL 'C'.

28. ~~BACKWRAP DATA OUTLETS:~~
~~PROVIDE J-BOX WITH 2-PORT FACEPLATE AND CABLING FOR DATA OUTLET AT BACKWRAP AT 18" A.F.F. TENANT'S VENDOR TO MAKE FINAL CONNECTION. CONFIRM EXACT REQUIREMENTS/LOCATIONS WITH TENANT PM. REFER TO CODED NOTE #13 FOR CONDUIT REQUIREMENTS.~~

29. FIRE ALARM BOOSTER PANEL (FABP):
EXISTING FIRE ALARM BOOSTER PANEL TO REMAIN. MARSHALL ALL TENANT SPACE FIRE ALARM DEVICES AT THIS LOCATION INTERCONNECT TO LANDLORDS MAIN FIRE ALARM SYSTEM. FIELD VERIFY EXACT LOCATION AND REQUIREMENTS. REFER TO FIRE ALARM DETAIL ON SHEET E4.0 FOR ADDITIONAL INFORMATION.

30. ~~FIRE ALARM HORN/STROBE:~~
~~RELOCATE (R) FIRE ALARM HORN/STROBE AS INDICATED. CONNECT TO FIRE ALARM JUNCTION BOX. FIELD VERIFY EXACT LOCATION AND REQUIREMENTS. 'C' INDICATED DEVICE IS TO BE CEILING MOUNTED AND 'S' INDICATED DEVICE IS TO BE SUSPENDED FROM STRUCTURE WITH JUNCTION BOX AND CONDUIT. REFER TO FIRE ALARM DETAIL ON SHEET E4.0 FOR ADDITIONAL INFORMATION.~~

31. ~~FIRE ALARM STROBE:~~
~~RELOCATE (R) EXISTING FIRE ALARM HORN/STROBE AS INDICATED. CONNECT TO FIRE ALARM JUNCTION BOX. FIELD VERIFY EXACT LOCATION AND REQUIREMENTS. 'C' INDICATED DEVICE IS TO BE CEILING MOUNTED AND 'S' INDICATED DEVICE IS TO BE SUSPENDED FROM STRUCTURE WITH JUNCTION BOX AND CONDUIT. REFER TO FIRE ALARM DETAIL ON SHEET E4.0 FOR ADDITIONAL INFORMATION.~~

32. ~~FIRE PROTECTION SYSTEM VALVE ALARM DEVICES:~~
~~EXISTING FIRE PROTECTION ZONE VALVE TAMPER AND WATER FLOW SWITCHES TO REMAIN. FIELD VERIFY EXACT LOCATION AND REQUIREMENTS.~~

33. OFFICE DESK RECEPTACLE/DATA OUTLETS:
PROVIDE DEDICATED QUADRUPLEX RECEPTACLES AND J-BOX WITH 3-PORT FACEPLATE AND CABLING FOR DATA OUTLET AT OFFICE DESK. TENANT'S VENDOR TO MAKE FINAL CONNECTION FOR DATA SERVICE. CONFIRM EXACT REQUIREMENTS/LOCATIONS WITH TENANT PM.

34. ~~RECEPTACLE IS TO BE CONTROLLED BY ROOM LIGHTING OCCUPANCY SENSOR FOR ENERGY CODE CONTROL COMPLIANCE. ROUTE THROUGH LUTRON #RMJ-H2R-DV-B POWPAK RELAY MODULE SYNCED WITH OCCUPANCY SENSOR. REFER TO SHEET E2.0 FOR OCCUPANCY SENSOR AND CIRCUITING. LABEL RECEPTACLE PER NEC.~~

35. ~~PROVIDE DUPLEX RECEPTACLE, DATA OUTLET, CONDUIT AND WIRE FOR DEDICATED VIDEO AND POWER CIRCUITS TO VIDEO WALL. REFER TO SHEET E3.0 FOR DETAILS OF INSTALLATION AND COORDINATE WITH ARCHITECTURAL SHEETS.~~

36. MOUNT HERITAGE ARCH GENERAL PURPOSE RECEPTACLES AT 15" A.F.F. IN HORIZONTAL ORIENTATION.

37. ~~FIRE ALARM MANUAL PULL STATION:~~
~~PROVIDE OR RELOCATE EXISTING (E) FIRE ALARM MANUAL PULL STATION. AND RECONNECTED TO LANDLORD FIRE ALARM SYSTEM. FIELD VERIFY EXACT LOCATION AND REQUIREMENTS. REFER TO F.A. DETAIL ON E4.0.~~

38. ~~PROVIDE CAT 6E CABLING FROM OFFICE AREA TO JUNCTION BOX. LEAVE 5' COILED AT TELEPHONE BOARD END AND 15' COILED AT JUNCTION BOX END. CABLE CONTINUATION AND TERMINATIONS AT FUTURE DEVICE BY OWNERS VENDOR.~~

39. DISPLAY WALL CONDUITS (TWO 1" CONDUITS):
- ONE 1" CONDUIT WITH J-BOX FOR DATA CABLING.
- ONE 1" CONDUIT FOR DISPLAY WALL RECEPTACLE.

CONDUIT SHALL BE CONTINUOUS FROM DISPLAY WALL BACK TO PANELBOARD OR OFFICE AREA. LABEL CONDUITS AT EACH END APPROPRIATELY. PULL CAT 6 CABLING (WITH 5' COILED AT EACH END) FOR DATA. COORDINATE WITH LANDLORD PRIOR TO WORK COMMENCING. REFER TO DETAILS J/A10.4 AND M/A10.4

40. NOT USED

41. NOT USED

42. AIR CURTAIN 'AC-1' AT FRONT DOOR IS TO BE INTERLOCKED WITH DOOR CONTACTS SO THAT AIR CURTAIN OPERATES ONLY WHEN DOOR IS OPEN. E.C. SHALL RUN 3/4" CONDUIT AND SPEED AND HEAT CONTROL WIRING FROM UNIT TO SPEED AND HEAT CONTROL SWITCHES IN OFFICE. REFER TO MECHANICAL SHEETS FOR ADDITIONAL INFORMATION.

43. PROVIDE RECEPTACLE ON DEDICATED CIRCUIT AS INDICATED FOR SALES FLOOR "STEAMERS".

44. NOT USED

45. SMOKE DETECTOR:
FIRE ALARM SMOKE DETECTOR. VERIFY EXISTING OR PROVIDE AND CONNECT TO EXISTING FIRE ALARM BOOSTER PANEL (FABP). FIELD VERIFY EXACT LOCATION AND REQUIREMENTS. 'C' INDICATED DEVICE IS TO BE CEILING MOUNTED WITH JUNCTION BOX AND CONDUIT. REFER TO FIRE ALARM DETAIL ON SHEET E4.0.

46. ~~PROVIDE RECEPTACLE AND MOUNT OMNI DIRECTIONAL ANTENNA AT HEIGHT AND GENERAL LOCATION AS INDICATED. PROVIDE JUNCTION BOX AND CONDUIT WITH PULL STRING ROUTED TO OFFICE IN LOWER LEVEL. OWNER'S LOW VOLTAGE VENDOR TO PROVIDE CAT6 CABLE (AND RACEWAY WHERE REQUIRED) BETWEEN ANTENNA AND NETWORK RACK.~~

47. PROVIDE BACKBOXES FOR TWO (2) VOLUME CONTROLS, ONE (1) FOR SALES RETAIL FLOOR SPEAKERS, AND ONE (1) FOR FITTING ROOM SPEAKERS AT OFFICE DESK ADJACENT TO SOUND SYSTEM (AMPLIFIER AND AUDIO SOURCE) EQUIPMENT. COORDINATE WITH AUDIO VENDOR AND OWNER FOR EXACT LOCATIONS AND SPECIFICATIONS.

48. PROVIDE IN-WALL JUNCTION BOX FOR DIRECT CONNECTION TO HAND DRYER (RATED 1500W, 13.6A, 120V)

POWER PLAN CODED NOTES

1. DESIGN DRAWINGS ARE SCHEMATIC. THE CONTRACTOR SHALL VISIT THE SITE PRIOR TO BIDDING OR AWARD OF CONTRACT TO INSPECT EXISTING FIELD CONDITIONS. THE CONTRACTOR SHALL INCLUDE ALL LABOR AND MATERIALS NECESSARY FOR FIELD MODIFICATIONS DUE TO EXISTING CONDITIONS.

2. THE CONTRACTOR SHALL CONTACT THE ARCHITECT, ENGINEER OR TENANT PRIOR TO BIDDING FOR INTERPRETATIONS AND CLARIFICATIONS OF THE DESIGN AND INCLUDE IN THIS BID ALL COSTS TO MEET THE DESIGN INTENT. CLARIFICATIONS MADE BY THE ARCHITECT, ENGINEER OR TENANT AFTER BIDDING WILL BE FINAL AND SHALL BE IMPLEMENTED AT THE CONTRACTORS COST.

3. BIDDING CONTRACTORS SHALL HAVE A WORKING KNOWLEDGE OF LOCAL CODES AND ORDINANCES AND SHALL INCLUDE IN THEIR BIDS THE COSTS FOR ALL WORK INSTALLED IN STRICT ACCORDANCE WITH GOVERNING CODES, THE PLANS AND SPECIFICATIONS NOT WITHSTANDING. THE CONTRACTOR SHALL ALERT ARCHITECT, ENGINEER OR TENANT OF ANY APPARENT DISCREPANCIES BETWEEN GOVERNING CODES AND DESIGN INTENT.

4. REFER TO MECHANICAL PLAN FOR LOCATION OF MECHANICAL EQUIPMENT. FIELD VERIFY EXACT LOCATIONS. PROVIDE ALL CONVENIENCE RECEPTACLES, SAFETY SWITCHES, WIRING, OR OTHER EQUIPMENT TO ENSURE A COMPLETE AND OPERABLE HVAC SYSTEM.

5. ALL CEILING MOUNTED RECEPTACLES AND COVERPLATES IN WHITE CEILING SHALL BE WHITE.

6. ALL WALL MOUNTED RECEPTACLES, SWITCHES, AND COVERPLATES SHALL BE WHITE.

7. CONDUIT FOR DATA/TELEPHONE OUTLETS AND LOW VOLTAGE CABLING SHALL HAVE A PULL/JUNCTION BOX INSTALLED AFTER EACH SET OF THREE 90 DEGREE BENDS.

8. LABEL ALL COVERPLATES ON INSIDE FACE OF PLATE WITH CIRCUIT NUMBER AND PANEL DESIGNATION. I.E. 'A-1'. CIRCUIT SHALL BE WRITTEN WITH PERMANENT MARKER IN A CONTRASTING COLOR.

9. CONDUIT FOR SPEAKER, TELEPHONE AND DATA CABLING FROM CASHWRAP SHALL STUB OUT ABOVE THE CEILING WITH A BUSHING TO PROTECT THE CABLE FROM THE EDGES OF THE CONDUIT AND NOT BE EXPOSED ON THE SALES FLOOR

10. ALL HORIZONTAL CABLING FOR VOICE AND DATA SHALL BE CATEGORY 6 RATED, UNLESS OTHERWISE NOTED.

11. PROVIDE ALL BACKBOXES AND CONDUIT FOR THE COMMUNICATIONS OUTLETS.

12. ALL CABLES AND DEVICES TO BE INSTALLED ABOVE FINISHED CEILING SHALL BE PLENUM RATED OR IN CONDUIT.

13. REFER TO SPECIFICATIONS SECTION 26 27 26 WIRING DEVICES, FOR EXACT MODEL NUMBER OF DEVICES TO BE USED.

14. FIELD VERIFY ALL CONDITIONS.

15. FIRE ALARM PLANS MUST BE ENGINEERED AND WET SIGNED AND SEALED BY A LANDLORD APPROVED, LICENSED, REGISTERED FIRE ALARM CONTRACTOR IN THE LOCAL JURISDICTION. GENERAL CONTRACTOR SHALL FIELD VERIFY AND COORDINATE REQUIREMENTS WITH LANDLORD PRIOR TO BID AND INCLUDE THE COST OF THIS WORK IN THIS BID.

16. OWNER TO TERMINATE ALL NETWORK CABLING TO DEVICES.

POWER PLAN GENERAL NOTES

LANDLORD COMMENTS:
- PRIOR TO ENTRY INTO THE ELECTRICAL ROOM OR ACCESS TO THE ROOF, TENANT'S GC SHALL COORDINATE WITH PROPERTY MANAGEMENT.
- PRIOR TO PERFORMING ANY SHUTDOWNS OR TESTING ON THE SPRINKLER OR FIRE ALARM THE GC SHALL COORDINATE WITH PROPERTY MANAGEMENT.
- THE GC SHALL USE THE LANDLORD'S SPRINKLER AND FIRE ALARM CONTRACTOR TO PERFORM ANY REQUIRED WORK TO THE LANDLORD'S SYSTEMS AT THE TENANT'S GC EXPENSE.

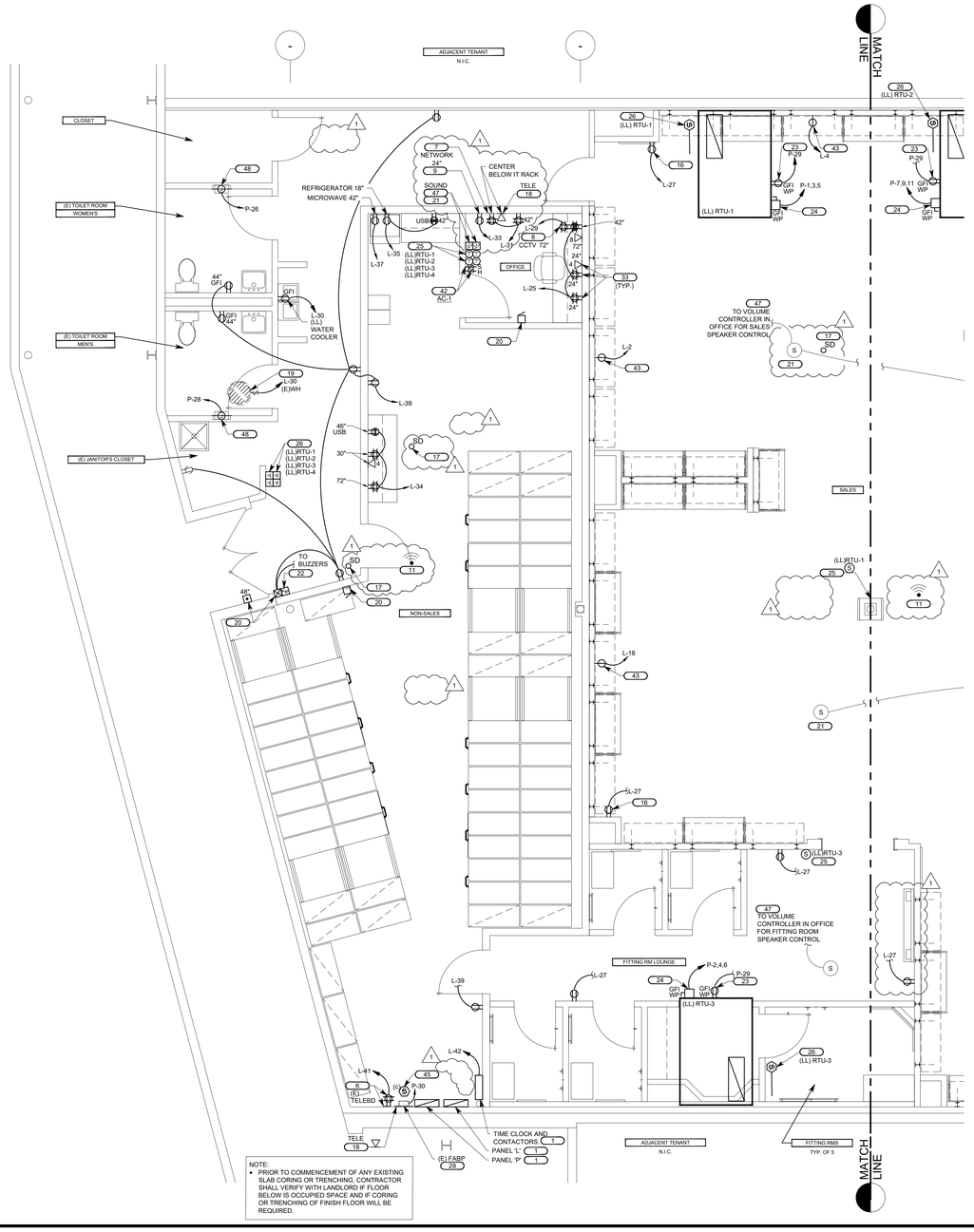

PROFESSIONAL CERTIFICATION. I HEREBY CERTIFY THAT THESE DOCUMENTS WERE PREPARED OR APPROVED BY ME, AND THAT I AM A DULY LICENSED PROFESSIONAL ENGINEER UNDER THE LAWS OF THE STATE OF MARYLAND, LICENSE NO. 32448, EXPIRATION DATE: 02-07-2020 .

NORTH

VERIFY ALL CONDITIONS IN FIELD PRIOR TO BIDS.

ELECTRICAL POWER PLAN

1/4"=1'-0"

A

OWNER:

5A LANDS' END LANE
DODGEVILLE, WI 53595

ARCHITECT / ENGINEER:

SHREMSHOCK
Shremshock Engineering, Inc.
7400 W. Campus Rd. Suite 150 New Albany, OH 43054
t: 614 545 4550 | f: 614 545 4555 | shremshock.com

©2019 THE ARCHITECT / ENGINEER ASSUMES NO RESPONSIBILITY FOR THE USE OF THESE PLANS FOR ANY PROJECT OTHER THAN SPECIFICALLY AUTHORIZED BY THEM AND SIGNED AND SEALED FOR SUCH SPECIFIC LOCATION IN THE STATE, PROVINCE OR TERRITORY SHOWN ON THE SEAL. THIS BUILDING USE IS ONLY APPLICABLE IN AREAS MEETING THE STATED DESIGN CRITERIA.

LANDS' END

STORE NO:
TBD

PROJECT LOCATION:
CONGRESSIONAL PLAZA
1667 ROCKVILLE PIKE
SPACE #06
ROCKVILLE, MD 20852

DESIGN TYPE:
-

REVISIONS:

REQUIRED BY:		DATE
1	TAV CLIENT, LANDLORD & B.D. COMMENTS	07/19/2019

* INDICATES NO REVISION TO THIS SHEET

ELECTRICAL POWER PLAN

DRAWN BY: TAV CHECKED BY: RAP

DATE ISSUED: 06/07/2019
PROJECT NO: 190148
DRAWING NO:
E1.1

MARK	SYMBOL	DESCRIPTION	INPUT WATTS
CH2 CH2 EM/NL	4'	TEXAS FLUORESCENTS #C48LF48W5650LDMVFID30K CHAIN HUNG 1'x4' LINEAR LED, WHITE FINISH (1) 48W LED LAMP. 0-10V DIMMING. FIXTURES MARKED EM HAVE 90 MINUTE BATTERY BACKUP BALLAST (EM)	48 WATTS
CL1 CL1 EM		TEXAS FLUORESCENTS #C48LF48W5650LDMVFID30K/C48FRLENS CEILING MOUNT 1'x4' LINEAR LED, FRESNEL LENS, WHITE FINISH (1) 48W LED LAMP. FIXTURES MARKED EM HAVE 90 MINUTE BATTERY BACKUP BALLAST (EM)	48 WATTS
P-1*		BOCK LIGHTING #P256-516-G2(RED)-1 DECORATIVE PENDANT, 120V. FIXTURE MUST COME WITH SOCKET WATTAGE RESTRICTIVE LABELS STATING MAXIMUM WATTAGE TO COMPLY WITH ENERGY CODE. (1)10W LED MEDIUM A19 LAMP INCLUDED. BOTTOM OF FIXTURE TO BE INSTALLED AT 96" A.F.F. (1)	10 WATTS
P-2*		BOCK LIGHTING #P256-516-UMB1352-1 DECORATIVE PENDANT, 120V. FIXTURE MUST COME WITH SOCKET WATTAGE RESTRICTIVE LABELS STATING MAXIMUM WATTAGE TO COMPLY WITH ENERGY CODE. (1)10W LED MEDIUM A19 LAMP INCLUDED.	10 WATTS
R-2 R-2/EM	R-2 R-2 EM	CONTECH LIGHTING #R6NC-4-30KC-12-D(-ER FOR EMERGENCY BALLAST) WITH #C6322M-CLR 65° CLEAR REFLECTOR. 120V, 3000K, 2600 LUMEN, 6" LED DOWNLIGHT. 90 MINUTE EMERGENCY BATTERY BACK-UP WITH 'ER' SPEC. DAMP LOCATION RATED.	28 WATTS
R-3 R-3/EM	R-3 R-3 EM	CONTECH LIGHTING #R6NC-3-27KC-12-D(-ER FOR EMERGENCY BALLAST) WITH #C6322M-CLR 65° CLEAR REFLECTOR. 120V, 2700K, 2000 LUMEN, 6" LED DOWNLIGHT. 90 MINUTE EMERGENCY BATTERY BACK-UP WITH 'ER' SPEC. DAMP LOCATION RATED.	20 WATTS
TRACK		JUNO TRAC-MASTER SINGLE CIRCUIT TRACK. FINISH TO MATCH TRACK HEADS. PROVIDE ALL COMPONENTS FOR COMPLETE SYSTEM.	---
T1*		JUNO TRAC-MASTER TRACK HEAD WITH WHITE FINISH, MODEL#T691WH AND TCP 12W, 3000K PAR30SN LED LAMP, MODEL #LED12P30S30KFL	12 WATTS
(E) EM	(E)/EM	LANDLORD PROVIDED LITHONIA #2BLT2 33LADP LP835 2X2 VOLUMETRIC RECESSED LIGHTING. CONTRACTOR TO REVIEW, AND IF NOT EXISTING, PROVIDE OPTION # EL14L 1400 LUMEN BATTERY PACK TO PROVIDE MINIMUM CODE REQUIRED EMERGENCY LIGHTING FOR 90 MIN. DURATION	26 WATTS
(E)	(E)	EXISTING (TO REMAIN) 2-LAMP CHAIN HUNG FLOURESCENT STRIP FIXTURE WITH (2) T8-32W LAMPS. CONTRACTOR TO CLEAN FIXTURE AND REPLACE LAMPS-IN KIND.	65 WATTS

MARK	SYMBOL	DESCRIPTION	INPUT WATTS
EM2	W / C	LIGHTALARMS # LCA-2SQ, DAMP LOCATION EMERGENCY EGRESS FIXTURE. SEALED MAINTENANCE FREE LEAD CALCIUM BATTERY, W=WALL MOUNT, C=CEILING/PENDANT MOUNT. LED INDICATOR LIGHT AND TEST SWITCH (2) 6V., 5.4 WATTS ADJUSTABLE HEADS UL924 LISTED.	11 WATTS
EX1	W / C	ASTRALITE #ELX-8-UNVRC-1-RC-WHT-EM, WITH RED LETTERING LED, EDGE-LIT EXIT SIGN WITH 90 MINUTE BATTERY BACK UP AND TEST SWITCH. W=WALL MOUNT, C=CEILING MOUNT. LED LAMPS INCLUDED WITH FIXTURE. UL924 LISTED.	< 5W PER SIDE
EX2	W	ASTRALITE #TP-U-R-W-EM-SD, WALL MOUNTED, THERMOPLASTIC LED EXIT SIGN WITH 90 MINUTE BATTERY BACK UP AND TEST SWITCH. WALL MOUNT, LED LAMPS INCLUDED WITH FIXTURE. UL924 LISTED.	< 5W PER SIDE
W-3		HOUSE OF TROY, STYLE #DT14-61 CLASSIC TRADITIONAL 14" WIDE POLISHED BRASS PICTURE LIGHT. 120V. CONTRACTOR TO PROVIDE (2) 40W MEDIUM BASE T10 LAMPS, 80W MAXIMUM	80 WATTS

LIGHTING SCHEDULE NOTES:

1. GENERAL CONTRACTOR SHALL VERIFY QUANTITIES OF FIXTURES AND LAMPS ON LIGHTING AND POWER PLAN.
2. ALL FIXTURES SHALL BE FURNISHED BY OWNER, INSTALLED AND WIRED BY GENERAL CONTRACTOR.
3. GENERAL CONTRACTOR IS RESPONSIBLE FOR FINAL LIGHTING QUANTITIES.
4. WALL MOUNTED EXIT LIGHTS TO BE MOUNTED AT 12" ABOVE DOOR HEADER UNLESS OTHERWISE NOTED IN PLANS OR ELEVATIONS.
5. LIGHTS WITH -E,/NL INDICATE LIGHTS TO BE WIRED AS EMERGENCY/NIGHT LIGHT.

FIXTURE LETTER (I.E. "R", "P", "W", "CH", "CL") INDICATES THE FIXTURES MOUNTING ARRANGEMENT. EM- EMERGENCY; EX- EXIT; CH- CHAIN HUNG; CL-CEILING; P-PENDANT; R-RECESSED; T-TRACK; W-WALL

"*" INDICATES THAT MANUFACTURER'S LABEL MUST BE AFFIXED STATING THAT THE SHOWN LAMP WATTAGE IS THE MAXIMUM LAMP WATTAGE THAT CAN BE USED FOR THIS FIXTURE, BASED ON LIGHTING ENERGY CODE COMPLIANCE.

LIGHTING FIXTURE SCHEDULE — S

1. DESIGN DRAWINGS ARE SCHEMATIC. THE CONTRACTOR SHALL VISIT THE SITE PRIOR TO BIDDING OR AWARD OF CONTRACT TO INSPECT EXISTING FIELD CONDITIONS. THE CONTRACTOR SHALL INCLUDE ALL LABOR AND MATERIALS NECESSARY FOR FIELD MODIFICATIONS DUE TO EXISTING CONDITIONS.
2. THE CONTRACTOR SHALL CONTACT THE ARCHITECT, ENGINEER OR TENANT PRIOR TO BIDDING FOR INTERPRETATIONS AND CLARIFICATIONS OF THE DESIGN AND INCLUDE IN THE BID ALL COSTS TO MEET THE DESIGN INTENT. CLARIFICATIONS MADE BY THE ARCHITECT, ENGINEER OR TENANT AFTER BIDDING WILL BE FINAL AND SHALL BE IMPLEMENTED AT THE CONTRACTORS COST.
3. BIDDING CONTRACTORS SHALL HAVE A WORKING KNOWLEDGE OF LOCAL CODES AND ORDINANCES AND SHALL INCLUDE IN THEIR BIDS THE COSTS FOR ALL WORK INSTALLED IN STRICT ACCORDANCE WITH GOVERNING CODES, THE PLANS AND SPECIFICATIONS NOT WITHSTANDING. THE CONTRACTOR SHALL ALERT ARCHITECT, ENGINEER OR TENANT OF ANY APPARENT DISCREPANCIES BETWEEN GOVERNING CODES AND DESIGN INTENT
4. LIGHTING SHALL BE CIRCUITED EXACTLY AS SHOWN ON PLANS.
5. REFER TO ARCHITECTURAL REFLECTED CEILING PLAN FOR EXACT LOCATION AND QUANTITY OF LIGHTING FIXTURES
6. EMERGENCY AND EXIT LIGHTS SHALL BE INSTALLED AND CIRCUITED PER THE LATEST NATIONAL ELECTRICAL CODE AND ALL LOCAL CODES. ALL EMERGENCY AND EXIT FIXTURES SHALL BE DUAL VOLTAGE (120/277 VOLT INPUT) WITH BATTERY BACKUP INCLUDING THOSE INDICATED AS SERVED DIRECTLY FROM INVERTER POWER SUPPLY.
7. CONTRACTOR IS RESPONSIBLE FOR ALL REFLECTED CEILING PLAN NOTES ON ARCHITECTURAL DRAWINGS.
8. TRACK LIGHTING IN OPEN CEILING AREAS IS TO BE MOUNTED ON UNISTRUT SUSPENDED FROM STRUCTURE BY 3/8" ALLTHREAD. REFER TO ARCHITECTURAL SHEET A11.1 FOR MOUNTING DETAIL.
9. FIELD VERIFY ALL CONDITIONS

LIGHTING PLAN GENERAL NOTES — M

1. LIGHTING CIRCUIT - ZONE 'a' :
CONNECT CIRCUIT THROUGH CONTACTOR. CONTACTOR CONTROLLED BY SINGLE POLE SWITCH 'a' SHOWN IN LIGHTING CONTROL DETAIL ON SHEET E3.0. SWITCH SHALL BE EQUIPPED WITH PILOT LIGHT, INDICATING THE CONDITION OF THE LIGHTS BEING CONTROLLED. REFER TO CODED NOTE 5 FOR SWITCH LOCATION.
2. LIGHTING CIRCUIT - ZONE 'b' :
CONNECT CIRCUIT THROUGH CONTACTOR. CONTACTOR CONTROLLED BY SINGLE POLE SWITCH 'b' SHOWN IN LIGHTING CONTROL DETAIL ON SHEET E3.0. SWITCH SHALL BE EQUIPPED WITH PILOT LIGHT, INDICATING THE CONDITION OF THE LIGHTS BEING CONTROLLED. REFER TO CODED NOTE 5 FOR SWITCH LOCATION.
3. LIGHTING CIRCUIT - ZONE 'c' :
CONNECT CIRCUIT THROUGH CONTACTOR. CONTACTOR CONTROLLED BY SINGLE POLE SWITCH 'c' SHOWN IN LIGHTING CONTROL DETAIL ON SHEET E3.0. SWITCH SHALL BE EQUIPPED WITH PILOT LIGHT, INDICATING THE CONDITION OF THE LIGHTS BEING CONTROLLED. REFER TO CODED NOTE 5 FOR SWITCH LOCATION.
4. ~~LIGHTING CIRCUIT - ZONE 'd' :~~
~~CONNECT CIRCUIT THROUGH CONTACTOR. LIGHTING CIRCUIT CONTROLLED BY SINGLE POLE SWITCH AS SHOWN IN LIGHTING CONTROL DETAIL ON SHEET E3.0. SWITCH SHALL BE EQUIPPED WITH PILOT LIGHT, INDICATING THE CONDITION OF THE LIGHTS BEING CONTROLLED. REFER TO CODED NOTE 5 FOR SWITCH LOCATION.~~
5. MASTER LIGHTING SWITCHBANK:
PROVIDE GANGED SWITCH LOCATION FOR LOCAL LIGHTING SWITCHES. PROVIDE UNDER COMMON FACEPLATE OR MULTIPLE FACEPLATES OF EQUAL WIDTHS. SEE 'LIGHTING CONTROL DETAIL ON SHEET E3.0. ALL SWITCHES TO BE PILOT LIGHT TYPE, LIGHT ON WHEN SWITCH IS ON.
6. STORE FRONT SIGN:
PROVIDE JUNCTION BOX AND TOGGLE TYPE DISCONNECT SWITCH, WITH MINIMUM 12" WHIP FOR CONNECTION TO THE STORE FRONT SIGN. LOCATE ABOVE CEILING NEAR ACCESS PANEL. COORDINATE EXACT REQUIREMENTS WITH SIGN VENDOR.
7. SHOW WINDOW LIGHTING AND STOREFRONT SIGN:
HOME RUN CIRCUIT THROUGH CONTACTOR CONTROLLED BY TIMECLOCK. TIMECLOCK SHALL BE A 24 HOUR,7-DAY WITH SKIP-A-DAY FEATURE, "TORK" SERIES DZS200BP. SCHEDULE TIMECLOCK TO TURN ON 1/2 HOUR BEFORE STORE OPENING AND OFF AT MIDNIGHT. CONTACTOR AND TIMECLOCK SHALL BE WALL MOUNTED ADJACENT TO PANELS.
8. SALES AREA EMERGENCY/NIGHT LIGHT/EXIT CIRCUIT:
ALL SALES AREA EMERGENCY LIGHTS, NIGHT LIGHTS, AND EXIT SIGNS SHALL BE CONNECTED TO UNSWITCHED CIRCUIT 'L-23'. FIXTURES ARE TO PROVIDE CONTINUOUS EGRESS AND EMERGENCY ILLUMINATION PER NEC 700.16 AND 700.17 AND LIFE SAFETY CODES. PROVIDE SCREW TYPE, LOCK ON DEVICE AT BREAKER.
9. NON-SALES AREA EMERGENCY/NIGHT LIGHT/EXIT CIRCUIT:
ALL NON SALES AREA EMERGENCY/NIGHT LIGHTS, AND EXIT LIGHTS SHALL BE CONNECTED TO UNSWITCHED LEG OF LOCAL LIGHTING CIRCUIT. FIXTURES ARE TO PROVIDE CONTINUOUS EGRESS AND EMERGENCY ILLUMINATION PER NEC 700.16 AND 700.17 AND LIFE SAFETY CODES. PROVIDE SCREW TYPE, LOCK ON DEVICE AT BREAKER.
10. EXISTING EXHAUST FAN (E):
PROVIDE CONTROL THROUGH WALL MOUNTED OCCUPANCY SENSOR, LUTRON #DW-200-W 120V, 1PH. REPLACING EXISTING 2-SPST SWITCH CONTROL OF LIGHTING AND EXH FAN.
11. NON-SALES AREA LIGHTS:
CONNECT NON-SALES AREA "SWITCHED" LIGHTS THROUGH POWPAK DIMMING CONTROL MODULE (LUTRON RMJ-8T-DV-B), WIRELESS WALL SWITCH (LUTRON PJ2-3BRL-GWH-L01), AND WIRELESS PENDANT MOUNTED OCCUPANCY SENSOR (LUTRON LRF2-OCR2B-P-WH) AS INDICATED. ELECTRICAL CONTRACTOR SHALL SYNC ZONE POWPAK, OCCUPANCY SENSOR, AND WALL SWITCH CONTROL AND SET PRESET ON WALL SWITCH AND PENDANT MOUNTED OCCUPANCY SENSOR TO AUTOMATICALLY TURN LIGHTS ON TO 50% OUTPUT WHEN OCCUPANTS ENTER THE ROOM, AUTOMATICALLY TURN OFF AFTER 15 MINUTES OF ROOM BEING UNOCCUPIED, AND REQUIRE MANUAL CONTROL FOR ALL OTHER LIGHT OUTPUTS. REFER TO DETAIL ON SHEET E3.0 FOR MORE INFORMATION. OCCUPANCY SENSOR IS TO BE PENDANT MOUNTED AT 13' A.F.F.
12. ~~LOCAL AREA OCCUPANCY/VACANCY SENSOR FOR AUTOMATIC RECEPTACLE CONTROL. SEE SHEET E1.0.~~
13. INDICATES CONNECTION BREAK IN TRACK LIGHTING.
14. CONNECT EMERGENCY BATTERY BALLAST TO LOCAL LIGHTING CIRCUIT AHEAD OF SWITCHING.

LIGHTING PLAN CODED NOTES (#) — D

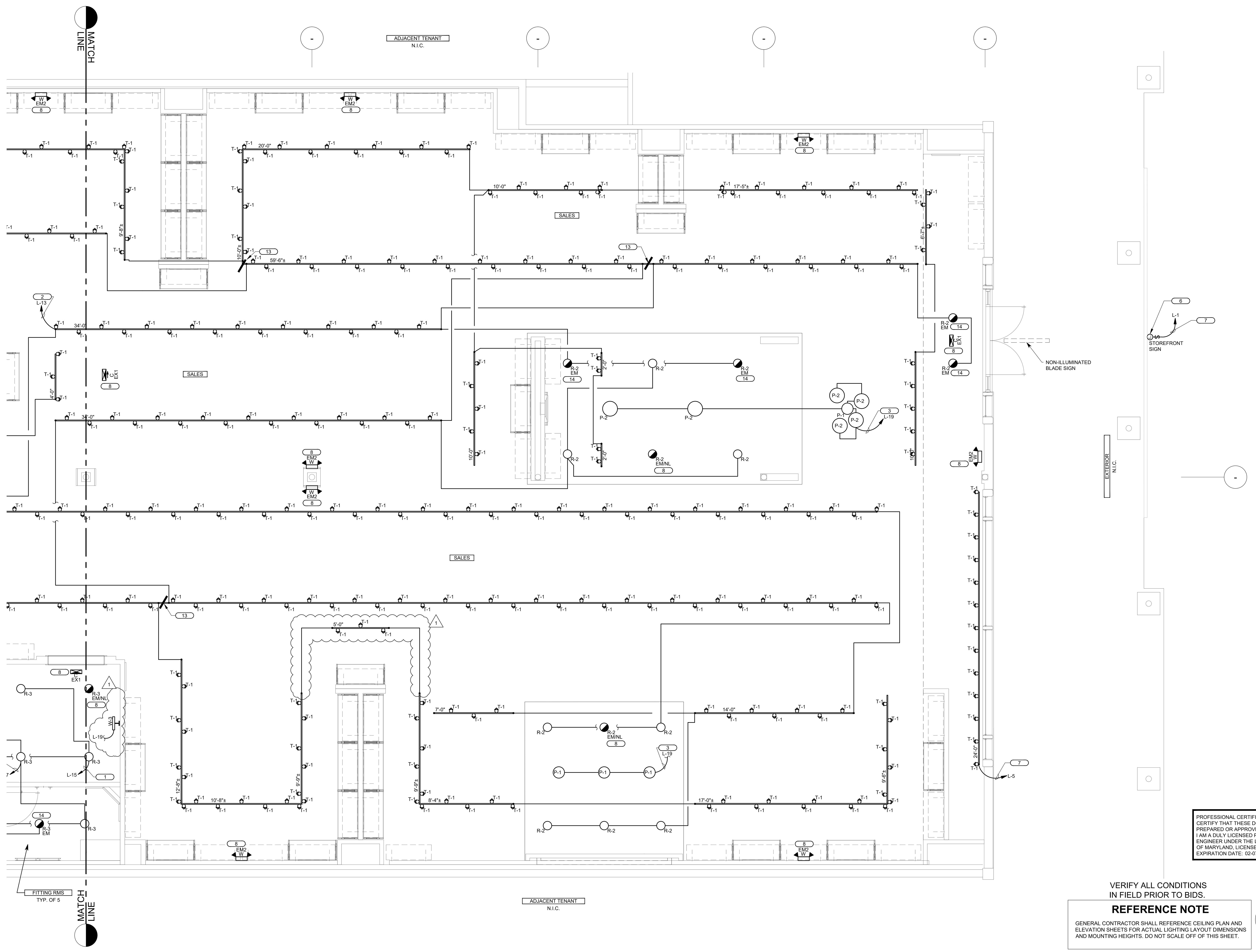

PROFESSIONAL CERTIFICATION. I HEREBY CERTIFY THAT THESE DOCUMENTS WERE PREPARED OR APPROVED BY ME, AND THAT I AM A DULY LICENSED PROFESSIONAL ENGINEER UNDER THE LAWS OF THE STATE OF MARYLAND, LICENSE NO. 32448, EXPIRATION DATE: 02-07-2020 .

VERIFY ALL CONDITIONS IN FIELD PRIOR TO BIDS.

REFERENCE NOTE

GENERAL CONTRACTOR SHALL REFERENCE CEILING PLAN AND ELEVATION SHEETS FOR ACTUAL LIGHTING LAYOUT DIMENSIONS AND MOUNTING HEIGHTS. DO NOT SCALE OFF OF THIS SHEET.

NORTH

ELECTRICAL LIGHTING PLAN — A

1/4"=1'-0"
-

OWNER:
5A LANDS' END LANE
DODGEVILLE, WI 53595

ARCHITECT / ENGINEER:

SHREMSHOCK
Shremshock Engineering, Inc.
7400 W. Campus Rd. Suite 150 New Albany, OH 43054
t: 614 545 4550 | f: 614 545 4555 | shremshock.com

©2019 THE ARCHITECT / ENGINEER ASSUMES NO RESPONSIBILITY OR LIABILITY FOR THE USE OF THESE PLANS FOR ANY PROJECT OTHER THAN SPECIFICALLY AUTHORIZED BY THEM AND SIGNED AND SEALED FOR SUCH SPECIFIC LOCATION IN THE STATE, PROVINCE OR TERRITORY SHOWN ON THE SEAL. THIS BUILDING USE IS ONLY APPLICABLE IN AREAS MEETING THE STATED DESIGN CRITERIA.

LANDS' END

STORE NO:
TBD

PROJECT LOCATION:
CONGRESSIONAL PLAZA
1667 ROCKVILLE PIKE
SPACE #06
ROCKVILLE, MD 20852

DESIGN TYPE:
-

REVISIONS:

REQUIRED BY:		DATE
1	TAV CLIENT, LANDLORD & B.D. COMMENTS	07/19/2019

* INDICATES NO REVISION TO THIS SHEET

ELECTRICAL LIGHTING PLAN

DRAWN BY: TAV   CHECKED BY: RAP

DATE ISSUED: 06/07/2019
PROJECT NO: 190148
DRAWING NO:
E2.0

MARK	SYMBOL	DESCRIPTION	INPUT WATTS
CH2 CH2 EM/NL	4' 4'	TEXAS FLUORESCENTS #C48LF48W5650LDMVFID30K CHAIN HUNG 1'x4' LINEAR LED, WHITE FINISH (1) 48W LED LAMP. 0-10V DIMMING. FIXTURES MARKED EM HAVE 90 MINUTE BATTERY BACKUP BALLAST (EM)	48 WATTS
CL1 CL1 EM		TEXAS FLUORESCENTS #C48LF48W5650LDMVFID30K/C48FRLENS CEILING MOUNT 1'x4' LINEAR LED, FRESNEL LENS, WHITE FINISH (1) 48W LED LAMP. FIXTURES MARKED EM HAVE 90 MINUTE BATTERY BACKUP BALLAST (EM)	48 WATTS
P-1*		BOCK LIGHTING #P256-516-G2(RED)-1 DECORATIVE PENDANT, 120V. FIXTURE MUST COME WITH SOCKET WATTAGE RESTRICTIVE LABELS STATING MAXIMUM WATTAGE TO COMPLY WITH ENERGY CODE. (1)10W LED MEDIUM A19 LAMP INCLUDED. BOTTOM OF FIXTURE TO BE INSTALLED AT 96" A.F.F. (1)	10 WATTS
P-2*		BOCK LIGHTING #P256-516-UMB1352-1 DECORATIVE PENDANT, 120V. FIXTURE MUST COME WITH SOCKET WATTAGE RESTRICTIVE LABELS STATING MAXIMUM WATTAGE TO COMPLY WITH ENERGY CODE. (1)10W LED MEDIUM A19 LAMP INCLUDED.	10 WATTS
R-2 R-2/EM	R-2 / R-2 EM	CONTECH LIGHTING #R6NC-4-30KC-12-D(-ER FOR EMERGENCY BALLAST) WITH #C6322M-CLR 65° CLEAR REFLECTOR. 120V, 3000K, 2600 LUMEN, 6" LED DOWNLIGHT. 90 MINUTE EMERGENCY BATTERY BACK-UP WITH 'ER' SPEC. DAMP LOCATION RATED.	28 WATTS
R-3 R-3/EM	R-3 / R-3 EM	CONTECH LIGHTING #R6NC-3-27KC-12-D(-ER FOR EMERGENCY BALLAST) WITH #C6322M-CLR 65° CLEAR REFLECTOR. 120V, 2700K, 2000 LUMEN, 6" LED DOWNLIGHT. 90 MINUTE EMERGENCY BATTERY BACK-UP WITH 'ER' SPEC. DAMP LOCATION RATED.	20 WATTS
TRACK		JUNO TRAC-MASTER SINGLE CIRCUIT TRACK. FINISH TO MATCH TRACK HEADS. PROVIDE ALL COMPONENTS FOR COMPLETE SYSTEM.	---
T1*		JUNO TRAC-MASTER TRACK HEAD WITH WHITE FINISH, MODEL#T691WH AND TCP 12W, 3000K PAR30SN LED LAMP, MODEL #LED12P30S30KFL	12 WATTS
(E) EM	(E)/EM	LANDLORD PROVIDED LITHONIA #2BLT2 33LADP LP835 2X2 VOLUMETRIC RECESSED LIGHTING. CONTRACTOR TO REVIEW, AND IF NOT EXISTING, PROVIDE OPTION # EL14L 1400 LUMEN BATTERY PACK TO PROVIDE MINIMUM CODE REQUIRED EMERGENCY LIGHTING FOR 90 MIN. DURATION	26 WATTS
(E)	(E)	EXISTING (TO REMAIN) 2-LAMP CHAIN HUNG FLOURESCENT STRIP FIXTURE WITH (2) T8-32W LAMPS. CONTRACTOR TO CLEAN FIXTURE AND REPLACE LAMPS-IN KIND.	65 WATTS

MARK	SYMBOL	DESCRIPTION	INPUT WATTS
EM2	W / C	LIGHTALARMS # LCA-2SQ, DAMP LOCATION EMERGENCY EGRESS FIXTURE. SEALED MAINTENANCE FREE LEAD CALCIUM BATTERY, W=WALL MOUNT, C=CEILING/PENDANT MOUNT. LED INDICATOR LIGHT AND TEST SWITCH (2) 6V., 5.4 WATTS ADJUSTABLE HEADS UL924 LISTED.	11 WATTS
EX1	W / C	ASTRALITE #ELX-8-UNVRC-1-RC-WHT-EM, WITH RED LETTERING LED, EDGE-LIT EXIT SIGN WITH 90 MINUTE BATTERY BACK UP AND TEST SWITCH. W=WALL MOUNT, C=CEILING MOUNT. LED LAMPS INCLUDED WITH FIXTURE. UL924 LISTED.	< 5W PER SIDE
EX2	W	ASTRALITE #TP-U-R-W-EM-SD, WALL MOUNTED, THERMOPLASTIC LED EXIT SIGN WITH 90 MINUTE BATTERY BACK UP AND TEST SWITCH. WALL MOUNT, LED LAMPS INCLUDED WITH FIXTURE. UL924 LISTED.	< 5W PER SIDE
W-3		HOUSE OF TROY, STYLE #DT14-61 CLASSIC TRADITIONAL 14" WIDE POLISHED BRASS PICTURE LIGHT. 120V. CONTRACTOR TO PROVIDE (2) 40W MEDIUM BASE T10 LAMPS, 80W MAXIMUM	80 WATTS

LIGHTING SCHEDULE NOTES:

1. GENERAL CONTRACTOR SHALL VERIFY QUANTITIES OF FIXTURES AND LAMPS ON LIGHTING AND POWER PLAN.
2. ALL FIXTURES SHALL BE FURNISHED BY OWNER, INSTALLED AND WIRED BY GENERAL CONTRACTOR.
3. GENERAL CONTRACTOR IS RESPONSIBLE FOR FINAL LIGHTING QUANTITIES.
4. WALL MOUNTED EXIT LIGHTS TO BE MOUNTED AT 12" ABOVE DOOR HEADER UNLESS OTHERWISE NOTED IN PLANS OR ELEVATIONS.
5. LIGHTS WITH -E,/NL INDICATE LIGHTS TO BE WIRED AS EMERGENCY/NIGHT LIGHT.

FIXTURE LETTER (I.E. "R", "P", "W", "CH", "CL") INDICATES THE FIXTURES MOUNTING ARRANGEMENT. EM- EMERGENCY; EX- EXIT; CH- CHAIN HUNG; CL-CEILING; P-PENDANT; R-RECESSED; T-TRACK; W-WALL

"*" INDICATES THAT MANUFACTURER'S LABEL MUST BE AFFIXED STATING THAT THE SHOWN LAMP WATTAGE IS THE MAXIMUM LAMP WATTAGE THAT CAN BE USED FOR THIS FIXTURE, BASED ON LIGHTING ENERGY CODE COMPLIANCE.

LIGHTING FIXTURE SCHEDULE S

1. DESIGN DRAWINGS ARE SCHEMATIC. THE CONTRACTOR SHALL VISIT THE SITE PRIOR TO BIDDING OR AWARD OF CONTRACT TO INSPECT EXISTING FIELD CONDITIONS. THE CONTRACTOR SHALL INCLUDE ALL LABOR AND MATERIALS NECESSARY FOR FIELD MODIFICATIONS DUE TO EXISTING CONDITIONS.
2. THE CONTRACTOR SHALL CONTACT THE ARCHITECT, ENGINEER OR TENANT PRIOR TO BIDDING FOR INTERPRETATIONS AND CLARIFICATIONS OF THE DESIGN AND INCLUDE IN THE BID ALL COSTS TO MEET THE DESIGN INTENT. CLARIFICATIONS MADE BY THE ARCHITECT, ENGINEER OR TENANT AFTER BIDDING WILL BE FINAL AND SHALL BE IMPLEMENTED AT THE CONTRACTORS COST.
3. BIDDING CONTRACTORS SHALL HAVE A WORKING KNOWLEDGE OF LOCAL CODES AND ORDINANCES AND SHALL INCLUDE IN THEIR BIDS THE COSTS FOR ALL WORK INSTALLED IN STRICT ACCORDANCE WITH GOVERNING CODES, THE PLANS AND SPECIFICATIONS NOT WITHSTANDING. THE CONTRACTOR SHALL ALERT ARCHITECT, ENGINEER OR TENANT OF ANY APPARENT DISCREPANCIES BETWEEN GOVERNING CODES AND DESIGN INTENT
4. LIGHTING SHALL BE CIRCUITED EXACTLY AS SHOWN ON PLANS.
5. REFER TO ARCHITECTURAL REFLECTED CEILING PLAN FOR EXACT LOCATION AND QUANTITY OF LIGHTING FIXTURES
6. EMERGENCY AND EXIT LIGHTS SHALL BE INSTALLED AND CIRCUITED PER THE LATEST NATIONAL ELECTRICAL CODE AND ALL LOCAL CODES. ALL EMERGENCY AND EXIT FIXTURES SHALL BE DUAL VOLTAGE (120/277 VOLT INPUT) WITH BATTERY BACKUP INCLUDING THOSE INDICATED AS SERVED DIRECTLY FROM INVERTER POWER SUPPLY.
7. CONTRACTOR IS RESPONSIBLE FOR ALL REFLECTED CEILING PLAN NOTES ON ARCHITECTURAL DRAWINGS.
8. TRACK LIGHTING IN OPEN CEILING AREAS IS TO BE MOUNTED ON UNISTRUT SUSPENDED FROM STRUCTURE BY 3/8" ALLTHREAD. REFER TO ARCHITECTURAL SHEET A11.1 FOR MOUNTING DETAIL.
9. FIELD VERIFY ALL CONDITIONS

LIGHTING PLAN GENERAL NOTES M

1. LIGHTING CIRCUIT - ZONE 'a' :
CONNECT CIRCUIT THROUGH CONTACTOR. CONTACTOR CONTROLLED BY SINGLE POLE SWITCH 'a' SHOWN IN LIGHTING CONTROL DETAIL ON SHEET E3.0. SWITCH SHALL BE EQUIPPED WITH PILOT LIGHT, INDICATING THE CONDITION OF THE LIGHTS BEING CONTROLLED. REFER TO CODED NOTE 5 FOR SWITCH LOCATION.
2. LIGHTING CIRCUIT - ZONE 'b' :
CONNECT CIRCUIT THROUGH CONTACTOR. CONTACTOR CONTROLLED BY SINGLE POLE SWITCH 'b' SHOWN IN LIGHTING CONTROL DETAIL ON SHEET E3.0. SWITCH SHALL BE EQUIPPED WITH PILOT LIGHT, INDICATING THE CONDITION OF THE LIGHTS BEING CONTROLLED. REFER TO CODED NOTE 5 FOR SWITCH LOCATION.
3. LIGHTING CIRCUIT - ZONE 'c' :
CONNECT CIRCUIT THROUGH CONTACTOR. CONTACTOR CONTROLLED BY SINGLE POLE SWITCH 'c' SHOWN IN LIGHTING CONTROL DETAIL ON SHEET E3.0. SWITCH SHALL BE EQUIPPED WITH PILOT LIGHT, INDICATING THE CONDITION OF THE LIGHTS BEING CONTROLLED. REFER TO CODED NOTE 5 FOR SWITCH LOCATION.
4. ~~LIGHTING CIRCUIT - ZONE 'd' :~~
~~CONNECT CIRCUIT THROUGH CONTACTOR. LIGHTING CIRCUIT CONTROLLED BY SINGLE POLE SWITCH AS SHOWN IN LIGHTING CONTROL DETAIL ON SHEET E3.0. SWITCH SHALL BE EQUIPPED WITH PILOT LIGHT, INDICATING THE CONDITION OF THE LIGHTS BEING CONTROLLED. REFER TO CODED NOTE 5 FOR SWITCH LOCATION.~~
5. MASTER LIGHTING SWITCHBANK:
PROVIDE GANGED SWITCH LOCATION FOR LOCAL LIGHTING SWITCHES. PROVIDE UNDER COMMON FACEPLATE OR MULTIPLE FACEPLATES OF EQUAL WIDTHS. SEE 'LIGHTING CONTROL DETAIL ON SHEET E3.0. ALL SWITCHES TO BE PILOT LIGHT TYPE, LIGHT ON WHEN SWITCH IS ON.
6. STORE FRONT SIGN:
PROVIDE JUNCTION BOX AND TOGGLE TYPE DISCONNECT SWITCH, WITH MINIMUM 12" WHIP FOR CONNECTION TO THE STORE FRONT SIGN. LOCATE ABOVE CEILING NEAR ACCESS PANEL. COORDINATE EXACT REQUIREMENTS WITH SIGN VENDOR.
7. SHOW WINDOW LIGHTING AND STOREFRONT SIGN:
HOME RUN CIRCUIT THROUGH CONTACTOR CONTROLLED BY TIMECLOCK. TIMECLOCK SHALL BE A 24 HOUR,7-DAY WITH SKIP-A-DAY FEATURE, "TORK" SERIES DZS200BP. SCHEDULE TIMECLOCK TO TURN ON 1/2 HOUR BEFORE STORE OPENING AND OFF AT MIDNIGHT. CONTACTOR AND TIMECLOCK SHALL BE WALL MOUNTED ADJACENT TO PANELS.
8. SALES AREA EMERGENCY/NIGHT LIGHT/EXIT CIRCUIT:
ALL SALES AREA EMERGENCY LIGHTS, NIGHT LIGHTS, AND EXIT SIGNS SHALL BE CONNECTED TO UNSWITCHED CIRCUIT 'L-23'. FIXTURES ARE TO PROVIDE CONTINUOUS EGRESS AND EMERGENCY ILLUMINATION PER NEC 700.16 AND 700.17 AND LIFE SAFETY CODES. PROVIDE SCREW TYPE, LOCK ON DEVICE AT BREAKER.
9. NON-SALES AREA EMERGENCY/NIGHT LIGHT/EXIT CIRCUIT:
ALL NON SALES AREA EMERGENCY/NIGHT LIGHTS, AND EXIT LIGHTS SHALL BE CONNECTED TO UNSWITCHED LEG OF LOCAL LIGHTING CIRCUIT. FIXTURES ARE TO PROVIDE CONTINUOUS EGRESS AND EMERGENCY ILLUMINATION PER NEC 700.16 AND 700.17 AND LIFE SAFETY CODES. PROVIDE SCREW TYPE, LOCK ON DEVICE AT BREAKER.
10. EXISTING EXHAUST FAN (E):
PROVIDE CONTROL THROUGH WALL MOUNTED OCCUPANCY SENSOR, LUTRON #DW-200-W 120V, 1PH. REPLACING EXISTING 2-SPST SWITCH CONTROL OF LIGHTING AND EXH FAN.
11. NON-SALES AREA LIGHTS:
CONNECT NON-SALES AREA "SWITCHED" LIGHTS THROUGH POWPAK DIMMING CONTROL MODULE (LUTRON RMJ-8T-DV-B), WIRELESS WALL SWITCH (LUTRON PJ2-3BRL-GWH-L01), AND WIRELESS PENDANT MOUNTED OCCUPANCY SENSOR (LUTRON LRF2-OCR2B-P-WH) AS INDICATED. ELECTRICAL CONTRACTOR SHALL SYNC ZONE POWPAK, OCCUPANCY SENSOR, AND WALL SWITCH CONTROL AND SET PRESET ON WALL SWITCH AND PENDANT MOUNTED OCCUPANCY SENSOR TO AUTOMATICALLY TURN LIGHTS ON TO 50% OUTPUT WHEN OCCUPANTS ENTER THE ROOM, AUTOMATICALLY TURN OFF AFTER 15 MINUTES OF ROOM BEING UNOCCUPIED, AND REQUIRE MANUAL CONTROL FOR ALL OTHER LIGHT OUTPUTS. REFER TO DETAIL ON SHEET E3.0 FOR MORE INFORMATION. OCCUPANCY SENSOR IS TO BE PENDANT MOUNTED AT 13' A.F.F.
12. ~~LOCAL AREA OCCUPANCY/VACANCY SENSOR FOR AUTOMATIC RECEPTACLE CONTROL. SEE SHEET E1.0.~~
13. INDICATES CONNECTION BREAK IN TRACK LIGHTING.
14. CONNECT EMERGENCY BATTERY BALLAST TO LOCAL LIGHTING CIRCUIT AHEAD OF SWITCHING.

LIGHTING PLAN CODED NOTES (#) D

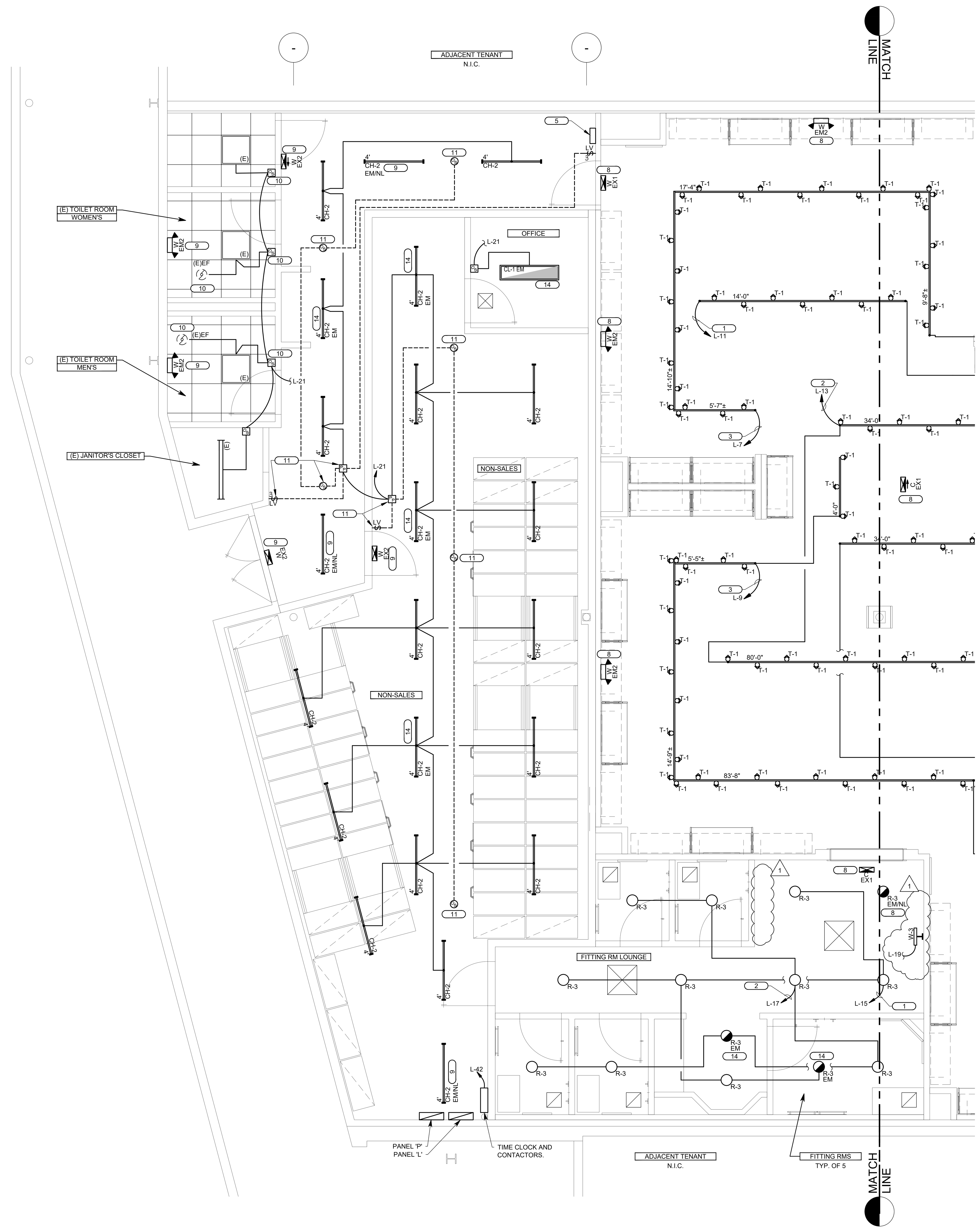

VERIFY ALL CONDITIONS IN FIELD PRIOR TO BIDS.

REFERENCE NOTE

GENERAL CONTRACTOR SHALL REFERENCE CEILING PLAN AND ELEVATION SHEETS FOR ACTUAL LIGHTING LAYOUT DIMENSIONS AND MOUNTING HEIGHTS. DO NOT SCALE OFF OF THIS SHEET.

NORTH

PROFESSIONAL CERTIFICATION. I HEREBY CERTIFY THAT THESE DOCUMENTS WERE PREPARED OR APPROVED BY ME, AND THAT I AM A DULY LICENSED PROFESSIONAL ENGINEER UNDER THE LAWS OF THE STATE OF MARYLAND, LICENSE NO. 32448, EXPIRATION DATE: 02-07-2020 .

ELECTRICAL LIGHTING PLAN

1/4"=1'-0"
-
A

OWNER:

5A LANDS' END LANE
DODGEVILLE, WI 53595

ARCHITECT / ENGINEER:

SHREMSHOCK
Shremshock Engineering, Inc.
7400 W. Campus Rd. Suite 150 New Albany, OH 43054
t: 614 545 4550 | f: 614 545 4555 | shremshock.com

©2019 THE ARCHITECT / ENGINEER ASSUMES NO RESPONSIBILITY OR LIABILITY FOR THE USE OF THESE PLANS FOR ANY PROJECT OTHER THAN SPECIFICALLY AUTHORIZED BY THEM AND SIGNED AND SEALED FOR SUCH SPECIFIC LOCATION IN THE STATE, PROVINCE OR TERRITORY SHOWN ON THE SEAL. THIS BUILDING USE IS ONLY APPLICABLE IN AREAS MEETING THE STATED DESIGN CRITERIA.

LANDS' END

STORE NO:
TBD

PROJECT LOCATION:
CONGRESSIONAL PLAZA
1667 ROCKVILLE PIKE
SPACE #06
ROCKVILLE, MD 20852

DESIGN TYPE:
-

REVISIONS:

REQUIRED BY:		DATE
1	TAV CLIENT, LANDLORD & B.D. COMMENTS	07/19/2019

* INDICATES NO REVISION TO THIS SHEET

ELECTRICAL LIGHTING PLAN

DRAWN BY: TAV CHECKED BY: RAP

DATE ISSUED: 06/07/2019
PROJECT NO: 190148
DRAWING NO:
E2.1

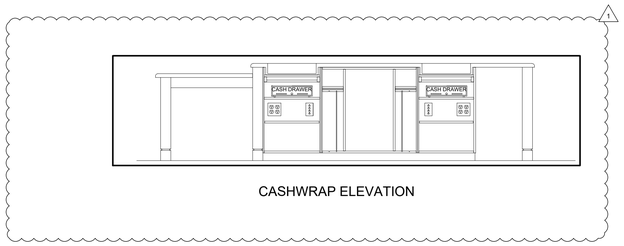

CASHWRAP ELEVATION

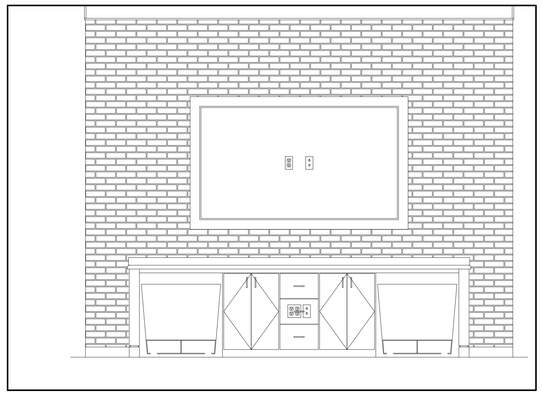

BACKWRAP ELEVATION

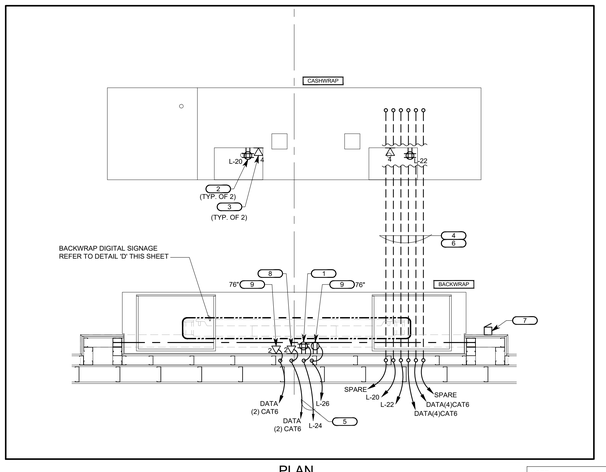

PLAN

NOTE:
- PRIOR TO COMMENCEMENT OF ANY EXISTING SLAB CORING OR TRENCHING, CONTRACTOR SHALL VERIFY WITH LANDLORD IF FLOOR BELOW IS OCCUPIED SPACE AND IF CORING OR TRENCHING OF FINISH FLOOR WILL BE REQUIRED.

1. BACKWRAP RECEPTACLE:
   20 AMP, 120V., QUADRUPLEX RECEPTACLE AT BACKWRAP AT 18" A.F.F. LOCATE AS DIRECTED BY TENANT/ARCHITECT. CIRCUIT AS INDICATED. REFER TO CODED NOTE #5 FOR CONDUIT REQUIREMENTS.
2. CASHWRAP DEDICATED RECEPTACLE:
   20 AMP, 120V., DEDICATED CIRCUIT, QUADRUPLEX RECEPTACLE FOR EACH CASH REGISTER. LOCATE AS DIRECTED BY TENANT/ARCHITECT. CIRCUIT AS INDICATED BY CIRCUIT NUMBER ON RECEPTACLE. REFER TO CODED NOTE #4 FOR CONDUIT REQUIREMENTS.
3. CASHWRAP DATA OUTLET:
   PROVIDE (4) FOUR DATA OUTLETS FOR EACH CASH REGISTER. USE 4" SQUARE BOX. PROVIDE CABLING. COORDINATE EXACT REQUIREMENTS/LOCATIONS WITH TENANT/ARCHITECT. REFER TO CODED NOTE #4 FOR CONDUIT REQUIREMENTS.
4. CASHWRAP CONDUITS (SIX 1" CONDUITS):
   - TWO 1" CONDUIT (4 DATA CABLES IN EACH) FOR DATA CABLING.
   - TWO 1" CONDUIT FOR CASHWRAP RECEPTACLES.
   - TWO 1" SPARE CONDUITS WITH PULL STRING.

   CONDUIT SHALL BE CONTINUOUS FROM CASHWRAP ACCESS AREA IN THE BOTTOM OF THE CASHWRAP BACK TO PANELBOARD OR OFFICE AREA. LABEL CONDUITS AT EACH END APPROPRIATELY. PULL CAT6 CABLING (WITH 5' COILED AT EACH END) FOR TELEPHONE AND DATA. RUN FLEXIBLE METAL CONDUIT FROM POS TO POS BY ACCESSIBLE MEANS. COORDINATE WITH LANDLORD PRIOR TO WORK COMMENCING.
5. BACKWRAP CONDUIT (ONE 1" CONDUIT):
   - ONE 1" CONDUIT WITH J-BOX FOR DATA CABLING.
   - ONE 1" CONDUIT FOR BACKWRAP RECEPTACLE.

   CONDUIT SHALL BE CONTINUOUS FROM BACKWRAP ACCESS AREA IN THE SIDEWALL OF THE BACKWRAP BACK TO THE PANELBOARD OR OFFICE AREA AS INDICATED. LABEL CONDUIT AT EACH END APPROPRIATELY. PULL CAT 6 CABLING (WITH 5' COILED AT EACH END) FOR TELEPHONE AND DATA. COORDINATE WITH LANDLORD PRIOR TO WORK COMMENCING. REFER TO DETAIL A/A10.4.
6. UNDER FLOOR CONDUIT:
   CORE EXISTING FLOOR FOR CONDUITS TO ALLOW CONDUIT TO BE EXTENDED FROM THE ACCESS PANEL AT THE BOTTOM OF THE CASHWRAP TO INSIDE NEAREST FULL HEIGHT WALL AT BACKWRAP AS INDICATED . CORE THEN PATCH FLOOR AS REQUIRED. GENERAL CONTRACTOR TO VERIFY WITH LANDLORD FLOOR CORING REQUIREMENTS PRIOR TO BID.
7. DELIVERY BUZZER SYSTEM:
   INSTALL A DELIVERY BUZZER SYSTEM AS SHOWN, INCLUDING EDWARDS #652 PUSH-BUTTON AT REAR DOOR, #592 TRANSFORMER AND #660 BUZZERS AS INDICATED. COORDINATE ALL REQUIREMENTS WITH TENANT AS TO LOCATIONS AND QUANTITIES PRIOR TO BIDDING. REFER TO SHEET E3.0 DETAIL 'C' FOR ADDITIONAL INFORMATION.
8. BACKWRAP DATA OUTLETS:
   PROVIDE J-BOX WITH 2-PORT FACEPLATE AND CABLING FOR DATA OUTLET AT BACKWRAP AT 18" A.F.F. TENANT'S VENDOR TO MAKE FINAL CONNECTION. CONFIRM EXACT REQUIREMENTS/LOCATIONS WITH TENANT PM. REFER TO CODED NOTE #5 FOR CONDUIT REQUIREMENTS.
9. PROVIDE DUPLEX RECEPTACLE, DATA OUTLET, CONDUIT AND WIRE FOR DEDICATED VIDEO AND POWER CIRCUITS TO VIDEO WALL. REFER TO DETAIL THIS SHEET FOR DETAILS OF INSTALLATION AND COORDINATE WITH ARCHITECTURAL SHEETS.

BACKWRAP AND CASHWRAP ELEVATION, PLAN, AND NOTES — N

1/2" = 1'-0"
-

SYMBOL	DESCRIPTION	MOUNTING HEIGHT TO CENTERLINE UNLESS NOTED OTHERWISE
	SINGLE RECEPTACLE, 3 WIRE GROUND TYPE	18"
	DUPLEX RECEPTACLE, 3 WIRE GROUND TYPE	18"
N	DUPLEX RECEPTACLE, 3 WIRE GROUND TYPE, CONTROL W/OCCUPANCY	18"
	DUPLEX RECEPTACLE, CEILING MOUNTED	---
WP	DUPLEX RECEPTACLE, WEATHERPROOF	18"
GFI	GROUND FAULT PROTECTED DUPLEX RECEPTACLE	18"
IG	ISOLATED GROUND DUPLEX RECEPTACLE	18"
IG	ISOLATED GROUND DOUBLE DUPLEX (QUADRUPLEX) RECEPTACLE	18"
	DOUBLE DUPLEX (QUADRUPLEX) RECEPTACLE	18"
	208V. RECEPTACLE	18"
	RECEPTACLE (FLOOR MOUNTED)	---
	120V DUPLEX RECEPTACLE WITH DUAL USB PORTS	18"
U	2 OR 4 PORT USB CHARGER	18"
	ELECTRIC PANEL	6'-0" TO TOP
	TRANSFORMER	AS REQUIRED
	SAFETY SWITCH (NON-FUSED)	AS REQUIRED
	SAFETY SWITCH (FUSED)	AS REQUIRED
	3-PHASE MAGNETIC MOTOR STARTER	AS REQUIRED
	COMBINATION STARTER/SAFETY SWITCH	AS REQUIRED
	SINGLE POLE SWITCH WITH OR WITHOUT PILOT LIGHT	48"
LV	LOW VOLTAGE SWITCH	48"
2	DOUBLE POLE SWITCH WITH OR WITHOUT PILOT LIGHT	48"
3	3 WAY SWITCH	48"
4	4 WAY SWITCH	48"
M	MANUAL MOTOR STARTING SWITCH (1, 2 OR 3 POLE)	AS REQUIRED
	MOTOR - 1 PHASE	
	MOTOR - 3 PHASE	
	TIME CLOCK/SWITCH	AS REQUIRED
	TELEPHONE OUTLET	18"
	COMBINATION TELEPHONE/DATA OUTLET	18"
	DATA OUTLET	18"
	TELEPHONE OUTLET (FLOOR MOUNTED)	---
	COMBINATION TELEPHONE/DATA OUTLET (FLOOR MOUNTED)	---
	DATA OUTLET (FLOOR MOUNTED)	---
	LOW VOLTAGE PUSH BUTTON	48"
	COMBINATION BUZZER/BELL	AS REQUIRED
	LOW VOLTAGE TRANSFORMER	AS REQUIRED
S	SPEAKER	---
	VOLUME CONTROL	48"
ST	SHOPPER TRACK	---
	WIRELESS ACCESS POINT (WAP)	---
	CAMERA	---
	JUNCTION BOX (JB)	AS REQUIRED
	THERMOSTAT	48"
	SENSOR	48"
	ZONE DAMPER (MOTORIZED)	---
	WALL MOUNTED OCCUPANCY SENSOR	44"
	WALL MOUNTED VACANCY SENSOR	44"
	CEILING MOUNTED OCCUPANCY SENSOR	---
	DAYLIGHT SENSOR	---
	DIMMER	---
	PHOTOCELL	---
	POWER PACK	---
	FIRE ALARM MANUAL PULL STATION	48"
	FIRE ALARM AUDIO/VISUAL SIGNAL DEVICE	80"
	FIRE ALARM VISUAL SIGNAL DEVICE	80"
	FIRE ALARM AUDIO SIGNAL DEVICE	80"
	FIRE ALARM SPEAKER/VISUAL SIGNAL DEVICE	80"
	FIRE ALARM SPEAKER SIGNAL DEVICE	80"
	MAGNETIC DOOR HOLDER VIA FIRE ALARM SYSTEM	48"
FACP	FIRE ALARM CONTROL PANEL	AS REQUIRED
FARP	FIRE ALARM REMOTE ANNUNCIATOR PANEL	AS REQUIRED
FABP	FIRE ALARM BOOSTER PANEL	AS REQUIRED
	FIRE ALARM JUNCTION BOX	AS REQUIRED
	FIRE ALARM DUCT MOUNTED SMOKE DETECTOR	---
	REMOTE ALARM/TEST SWITCH FOR DUCT DETECTOR	AS REQUIRED
	CEILING MOUNTED SMOKE DETECTOR	---
	FIRE ALARM WATER FLOW SWITCH	AS REQUIRED
	FIRE ALARM TAMPER SWITCH	AS REQUIRED
	FIRE ALARM RELAY	AS REQUIRED
	BURGLAR ALARM SECURITY KEYPAD	4'-0" A.F.F.
	SECURITY MOTION DETECTOR	12'-0" TO B.O. J-BOX
	GLASS BREAK SENSOR	---
	DOOR CONTACTS	---
	DJ JACK	18"
BURG	BURGLAR PANEL	---
CCTV	SECURITY CAMERA PANEL	---
SD	SECURITY DOME	---

NOTE: NOT ALL SYMBOLS USED

ELECTRICAL SYMBOLS — K

A/C	AIR CONDITIONER	MAX	MAXIMUM
AC	ALTERNATING CURRENT	MCA	MINIMUM CIRCUIT AMPACITY
AFF	ABOVE FINISH FLOOR	MCC	MOTOR CONTROL CENTER
AHU	AIR HANDLING UNIT	MFR	MANUFACTURER
AIC	AMPERE INTERRUPTING CAPACITY	MH	MOUNTING HEIGHT
AMP,A	AMPERE	MOCP	MAXIMUM OVER CURRENT PROTECTION
		MTD	MOUNTED
C, COND	CONDUIT		
CB	CIRCUIT BREAKER	NC	NORMALLY CLOSED
CCTV	CLOSED CIRCUIT TELEVISION CIRCUIT	NF	NON-FUSED
CEIL/(C)	CEILING	NIC	NOT IN CONTRACT
COL	COLUMN	NO	NORMALLY OPEN
CON	CONTINUED	OC	ON CENTER
CU	COPPER	OL	OVERLOAD
DF	DRINKING FOUNTAIN	EF	EXHAUST FAN
DIA	DIAMETER		
DISC	DISCONNECT	P	POLE
DISTR	DISTRIBUTION	PH	PHASE
DWG	DRAWING	PA	PUBLIC ADDRESS
		PE	PHOTOELECTRIC
ETR(IE)	EXISTING TO REMAIN	PNL	PANEL
EF	EXHAUST FAN	PWR	POWER
ELECT	ELECTRICAL		
EWC	ELECTRIC WATER COOLER	R(IR)	RELOCATE EXISTING
EX.	EXISTING	RM	ROOM
EXO	EXTERNALLY OPERATED	RT	RAIN TIGHT
EXT LOC	EXTERIOR LOCATION	RTU	ROOF TOP UNIT
FA	FIRE ALARM	SW	SWITCH
FIXT	FIXTURE	SW'BD	SWITCHBOARD
FLA	FULL LOAD AMPS		
		TC	TIME CLOCK
G	GROUND	TEL	TELEPHONE
GFI	GROUND FAULT INTERRUPTER	TYP	TYPICAL
HP	HORSE POWER	V	VOLT
HV	HIGH VOLTAGE		
HZ	HERTZ	WP	WEATHERPROOF
IG	ISOLATED GROUND		
JB	JUNCTION BOX		
KVA	KILOVOLT-AMPS		
LCL	LONG CONTINUOUS LOAD		
LTG	LIGHTING		
LV	LOW VOLTAGE		

ABBREVIATIONS — J

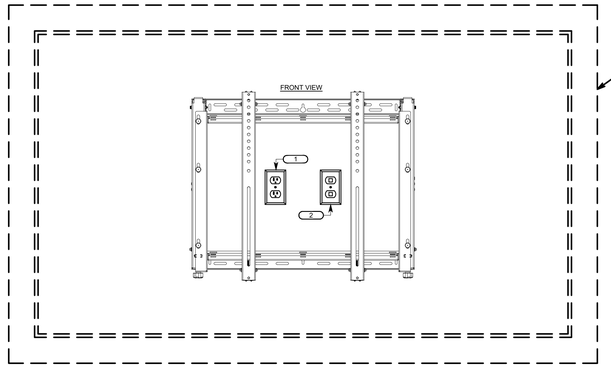

1. POWER RECEPTACLE CENTERED 76" A.F.F. .
2. DATA OUTLET CENTERED 76" A.F.F..

NOTE:
REFER TO ARCHITECTURAL SHEETS FOR ADDITIONAL INFORMATION AND LOCATION OF VIDEO WALL.

VIDEO WALL DETAIL — D

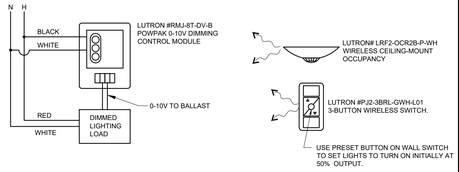

NOTES:

- WIRELESSLY SYNC ALL CEILING MOUNTED OCCUPANCY SENSORS AND WALL SWITCHES TO POWPAK DIMMING CONTROL MODULE.
- SET LIGHTING TO TURN ON AUTOMATICALLY AT 50% OUTPUT VIA OCCUPANCY SENSOR UPON OCCUPANTS ENTERING THE SPACE AND REQUIRE MANUAL CONTROL VIA WALL SWITCH FOR ALL OTHER LIGHT OUTPUT LEVELS.
- SET LIGHTING TO TURN OFF AUTOMATICALLY AFTER 15 MINUTES OF SPACE BEING UNOCCUPIED.

NON-SALES LIGHTING CONTROL DETAIL — G

NOT USED — F

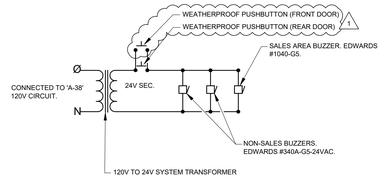

GENERAL NOTES:

- ROUTE CONDUIT UP IN WALL OR COLUMN TO CEILING SPACE.
- RUN WIRE ABOVE CEILING IN CONDUIT WHERE REQUIRED BY CODE.
- PARALLEL WIRE BUZZERS AND DOOR PUSHBUTTONS.
- PROVIDE ADDITIONAL TRANSFORMER (AS REQUIRED) IN EVENT OF VOLTAGE DROP DUE TO LENGTH OF SECONDARY LOW VOLTAGE WIRING.

1

DELIVERY BUZZER SCHEMATIC DETAIL — C

NOT USED — E

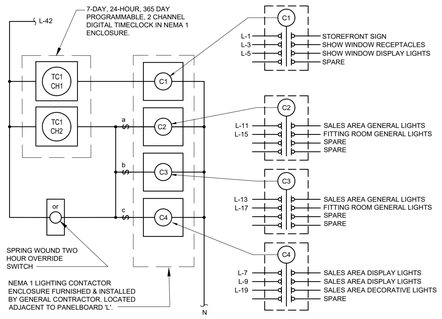

MASTER LIGHTING SWITCH BANK

'or'	'c' (C4)	'b' (C3)	'a' (C2)
	L-7, L-9 L-19	L-13 L-17	L-11 L-15
2 HR OVERRIDE SWITCH	SALES DISPLAY & DECORATIVE LIGHTING	SALES & FITTING ROOM LIGHTING	SALES & FITTING ROOM LIGHTING
TIMER	SPST	SPST	SPST

NOTES:

- ALL CONTACTORS ARE NORMALLY OPEN, ELECTRICALLY HELD CLOSED, WITH THE NUMBER OF POLES AS SHOWN.
- SUPPLY POWER TO CONTACTORS THRU L-42 IN ALL CASES.
- LOCATE CONTACTORS AND TIME CLOCK ADJACENT TO PANELBOARD 'L'.

LIGHTING CONTROLS LEGEND

TC	SHOW WINDOW LIGHTING SHOW WINDOW RECEPTACLES STOREFRONT SIGN
C2/a	GENERAL LIGHTING
C3/b	GENERAL LIGHTING
C4/c	DISPLAY & DECORATIVE LIGHTING

PROFESSIONAL CERTIFICATION. I HEREBY CERTIFY THAT THESE DOCUMENTS WERE PREPARED OR APPROVED BY ME, AND THAT I AM A DULY LICENSED PROFESSIONAL ENGINEER UNDER THE LAWS OF THE STATE OF MARYLAND, LICENSE NO. 32448, EXPIRATION DATE: 02-07-2020 .

LIGHTING CONTROLS DETAIL — A

OWNER:

5A LANDS' END LANE
DODGEVILLE, WI 53595

ARCHITECT / ENGINEER:

SHREMSHOCK
Shremshock Engineering, Inc.
7400 W. Campus Rd, Suite 150 New Albany, OH 43054
t: 614 545 4500 | f: 614 545 4555 | shremshock.com

©2019 THE ARCHITECT / ENGINEER ASSUMES NO RESPONSIBILITY FOR THE USE OF THESE PLANS OTHER THAN THESE PLANS FOR ANY PROJECT OTHER THAN SPECIFICALLY AUTHORIZED BY THEM AND SIGNED AND SEALED FOR SUCH SPECIFIC LOCATION IN THE STATE, PROVINCE OR TERRITORY SHOWN ON THE SEAL. THIS BUILDING USE IS ONLY APPLICABLE IN AREAS MEETING THE STATED DESIGN CRITERIA.

LANDS' END

STORE NO:
TBD

PROJECT LOCATION:
CONGRESSIONAL PLAZA
1667 ROCKVILLE PIKE
SPACE #06
ROCKVILLE, MD 20852

DESIGN TYPE:
-

REVISIONS:

REQUIRED BY:		DATE
1	TAV CLIENT, LANDLORD & B.D. COMMENTS	07/19/2019

* INDICATES NO REVISION TO THIS SHEET

ELECTRICAL DETAILS

DRAWN BY: TAV CHECKED BY: RAP

DATE ISSUED: 06/07/2019
PROJECT NO: 190148

DRAWING NO:
E3.0

LANDLORD COMMENTS:
- PRIOR TO ENTRY INTO THE ELECTRICAL ROOM OR ACCESS TO THE ROOF, TENANT'S GC SHALL COORDINATE WITH PROPERTY MANAGEMENT.
- PRIOR TO PERFORMING ANY SHUTDOWNS OR TESTING ON THE SPRINKLER OR FIRE ALARM THE GC SHALL COORDINATE WITH PROPERTY MANAGEMENT.
- THE GC SHALL USE THE LANDLORD'S SPRINKLER AND FIRE ALARM CONTRACTOR TO PERFORM ANY REQUIRED WORK TO THE LANDLORD'S SYSTEMS AT THE TENANT'S GC EXPENSE.

NOT USED | W

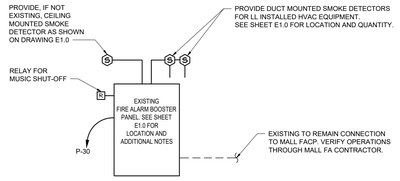

FIRE ALARM RISER NOTES:

1. SEE SHEET E1.0 FOR ACTUAL NUMBER OF DEVICES, AND ADDITIONAL NOTES.
2. ALL NEW MATERIALS SHALL BEAR UL LABELS.
3. SUPPLY SHOP DRAWINGS FOR FIRE ALARM SYSTEM TO LOCAL AUTHORITY FOR APPROVAL PRIOR TO INSTALLATION.
4. FURNISH AND INSTALL ALL LABOR AND MATERIALS REQUIRED FOR A COMPLETE INSTALLATION AS INDICATED.
5. ALL WORK SHALL COMPLY WITH THE REQUIREMENTS OF NEC, NFPA, STATE AND LOCAL CODES.

FIRE ALARM SEQUENCE OF OPERATION:

1. UPON ALARM SIGNAL FROM ANY INITIATING DEVICE:
   A. INITIATE AN ALARM SIGNAL AT TENANT'S FIRE ALARM BOOSTER PANEL AND TO MALL FACP
   B. SHUT DOWN TENANT'S HVAC SYSTEM (IF APPLICABLE)
   C. ~~INITIATE TENANT'S HORN/STROBES~~
   D. ACTIVATE THE TENANT ZONE SMOKE CONTROL EXHAUST SYSTEM.(IF APPLICABLE)
   E. NOTIFY LOCAL FIRE DEPARTMENT OF FIRE EMERGENCY LOCATION.
   F. SEND SIGNAL TO OWNERS SECURITY AND LOSS PREVENTION CENTRAL MONITORING SYSTEM.

FIRE ALARM RISER DIAGRAM & NOTES | V

INFINITE PRIMARY SOURCE

TRANSFORMER - T1

KVA	500
Voltage secondary	208
%Z	4.35
%Z TOL	-10% (Max Fault)

FAULT - X1

$I_{total\ s.c.\ (L-L-L)}$	35,451 AMPS
Voltage (L-L)	208 V

CONDUCTOR RUN - C1

LENGTH	20 FT
SIZE	750
QTY (per phase)	3
TYPE	Three Single Conductors
CONDUIT	Nonmagnetic
WIRE	Al, 600 V

FAULT - X2

$I_{total\ s.c.\ (L-L-L)}$	32,952 AMPS
Voltage (L-L)	208 V

CONDUCTOR RUN - C2

LENGTH	175 FT
SIZE	3/0
QTY (per phase)	1
TYPE	Three Single Conductors
CONDUIT	Steel
WIRE	Cu, 600 V

FAULT - X3

$I_{total\ s.c.\ (L-L-L)}$	6,953 AMPS
Voltage (L-L)	208 V

ELECTRICAL SHORT CIRCUIT CALCS. | R

MECHANICAL FEEDER/CONNECTION SCHEDULE

ITEM	VOLTAGE	HP	KW	M.C.A.	FEEDERS WIRE	FEEDERS COND	TYPE OF CONN	BRANCH BREAKER/ SWITCH	REMARKS
(E) WATER HEATER	120V 1PH	----	1.65	----	EXISTING	EXISTING	EXISTING	(E) 20A-1P	SEE NOTE #3
(LL) RTU-1	208V 3PH	1.0	---	42.0	3#6 THHN 1#10 G	3/4"	DISCONNECT SWITCH	50A-3P	SEE NOTE #1
(LL) RTU-2	208V 3PH	1.0	---	42.0	3#6 THHN 1#10 G	3/4"	DISCONNECT SWITCH	50A-3P	SEE NOTE #1
(LL) RTU-3	208V 3PH	1.0	---	42.0	3#6 THHN 1#10 G	3/4"	DISCONNECT SWITCH	50A-3P	SEE NOTE #1
(LL) RTU-4	208V 3PH	1.0	---	42.0	3#6 THHN 1#10 G	3/4"	DISCONNECT SWITCH	50A-3P	SEE NOTE #1
AC-1	208V 3PH	(2) 0.5	28.0	CKT#1 47.5	3#4 THHN 1#10 G	1"	DISCONNECT SWITCH	60A-3P	SEE NOTE #2
				CKT#2 38.9	3#6 THHN 1#10 G	3/4"	DISCONNECT SWITCH	50A-3P	SEE NOTE #2

NOTE:
1. DISCONNECT IS FURNISHED WITH UNIT.
2. DISCONNECT IS TO BE FURNISHED AND INSTALLED BY GENERAL CONTRACTOR (COORDINATE WITH SUB-CONTRACTORS, FOR INSTALLATION).
3. EXISTING DISCONNECT, FEEDERS & CONDUIT TO REMAIN. CONTRACTOR TO VERIFY SCHEDULE INFORMATION
4. RELOCATE DISCONNECTING MEANS AND EXTEND WIRE AND CONDUIT AS REQUIRED. (VERIFY EXISTING PRIOR TO ANY WORK OR ORDERING ANY EQUIPMENT/ACCESSORIES)

MECHANICAL FEEDER SCHEDULE | L

FIELD VERIFY ALL CONDITIONS

DESIGN DRAWINGS ARE SCHEMATIC. THE CONTRACTOR SHALL VISIT THE SITE PRIOR TO BIDDING OR AWARD OF CONTRACT TO INSPECT EXISTING FIELD CONDITIONS. THE CONTRACT SHALL INCLUDE ALL LABOR AND MATERIALS NECESSARY FOR FIELD MODIFICATIONS DUE TO EXISTING CONDITIONS.

THE CONTRACTOR SHALL CONTACT THE ARCHITECT, ENGINEER OR TENANT PRIOR TO BIDDING FOR INTERPRETATIONS AND CLARIFICATIONS OF THE DESIGN AND INCLUDE IN HIS BID ALL COSTS TO MEET THE DESIGN INTENT. CLARIFICATIONS MADE BY THE ARCHITECT, ENGINEER OR TENANT AFTER BIDDING WILL BE FINAL AND SHALL BE IMPLEMENTED AT THE CONTRACTORS COST.

BIDDING CONTRACTORS SHALL HAVE A WORKING KNOWLEDGE OF LOCAL CODES AND ORDINANCES AND SHALL INCLUDE IN THEIR BIDS THE COSTS FOR ALL WORK INSTALLED IN STRICT ACCORDANCE WITH GOVERNING CODES, THE PLANS AND SPECIFICATIONS NOT WITHSTANDING. THE CONTRACTOR SHALL ALERT ARCHITECT, ENGINEER OR TENANT OF ANY APPARENT DISCREPANCIES BETWEEN GOVERNING CODES AND DESIGN INTENT.

VERIFY ALL REQUIREMENTS WITH LANDLORD AND LOCAL POWER COMPANY PRIOR TO BID. INCLUDE IN BID THE COST OF ALL WORK REQUIRED FOR A FULLY OPERATIONAL ELECTRICAL SERVICE SYSTEM INCLUDING BUT NOT LIMITED TO AIC RATINGS, FEEDER SIZE, METER REQUIREMENTS, UPGRADE OF LANDLORD'S EQUIPMENT, CONDUIT, ETC.

NOT USED | K

RISER DIAGRAM GENERAL NOTES:

A. HVAC CIRCUIT BREAKERS TO BE "HACR" TYPE WHERE REQUIRED BY EQUIPMENT NAMEPLATE PER N.E.C.

B. BALANCE ALL PANELS AND ELECTRICAL EQUIPMENT, UNDER LOAD CONDITIONS, TO ±7% BETWEEN PHASES: A/B, B/C, C/A REGARDLESS OF CIRCUITING INDICATED. PROVIDE BALANCE SHEET TO CONSTRUCTION MANAGER AT PUNCHLIST.

C. PROPER CLEARANCE MUST BE MAINTAINED ABOUT ELECTRICAL EQUIPMENT PER N.E.C. FIELD VERIFY EXACT MOUNTING SPACE AVAILABLE IN ELECTRICAL ROOM/AREA PRIOR TO INSTALLATION OF ELECTRICAL EQUIPMENT.

D. MAKE ALL FINAL ELECTRICAL CONNECTIONS FOR A COMPLETE ELECTRICAL DISTRIBUTION SYSTEM.

E. ~~ALL CONNECTIONS/DISCONNECTIONS TO LANDLORDS/UTILITIES SERVICE EQUIPMENT SHALL BE AS DIRECTED BY LANDLORDS/UTILITIES SITE REPRESENTATIVE. TENANT GENERAL CONTRACTOR SHALL BE RESPONSIBLE FOR ALL TERMINATION/DETERMINATION EXPENSES.~~

F. SYSTEM SHALL BE GROUNDED TO THE MAIN BUILDING'S GROUNDING SYSTEM.

G. DISCONNECT SWITCHES AND PANELS SHALL BE INSTALLED ON PLYWOOD BACKERBOARDS.

H. TENANT CONTRACTOR MUST VERIFY ELECTRICAL SERVICE, SUB-FEED WIRING AND PANELS PRIOR TO START OF TENANT'S ELECTRICAL WORK.

I. TENANT GENERAL CONTRACTOR SHALL MAKE APPLICATION TO THE LOCAL UTILITY FOR CONTINUED METERED ELECTRIC SERVICE IN THE TENANT'S NAME. TENANT GENERAL CONTRACTOR SHALL CONFIRM ALL LOCAL UTILITY GUIDELINES AND REQUIREMENTS PRIOR TO BID, SHALL INCLUDE THE COSTS OF THESE REQUIREMENTS IN THE BID, AND SHALL COMPLY WITH THEM DURING CONSTRUCTION.

J. ~~APPLICATION FOR A TEMPORARY ELECTRIC METER AND CONVERSION TO A PERMANENT ELECTRIC METER SHALL BE SUBMITTED TO THE UTILITY UPON AWARD OF CONTRACT. INSTALLATION AND PROVISIONS FOR SAME SHALL COMMENCE WITHIN THE FIRST WEEK OF CONSTRUCTION.~~

K. AVAILABLE FAULT CURRENT AT SERVICE EQUIPMENT SHALL BE LEGIBLY MARKED IN THE FIELD WITH THE MAXIMUM AVAILABLE FAULT CURRENT PER NATIONAL ELECTRICAL CODE (NEC) ARTICLE 110.24

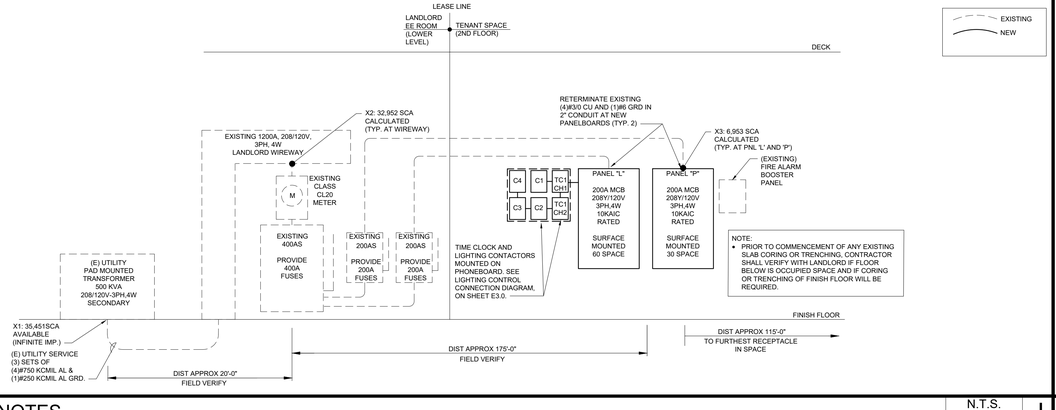

ELECTRICAL RISER DIAGRAM AND NOTES | N.T.S. - | J

Panel Wiring Schedule (3-phase)

Panelboard	L	Voltage	120/208	Phase	3	Wire	4
Panel Type	Square-D Co. Type "NQ"	Mains	200A MCB	Mains Rating	225A	AIC Rating	10,000
NEMA Type Enclosure	1	Mounting	Surface	Options		Note	

Ckt. No.	Zone/ Note	Load Description	Equip #	Brkr Opts	Brkr Size*	Actual KW	Phase	Actual KW	Brkr Size*	Brkr Opts	Equip #	Load Description	Zone/ Note	Ckt. No.
1	TC	STOREFRONT SIGN			20/1	1.200	A	1.000	20/1			SALES FLOOR STEAMER		2
3	TC	SHOW WINDOW RECEPTS			20/1	0.540	B	1.000	20/1			SALES FLOOR STEAMER		4
5	TC	SHOW WINDOW DISPLAY TRK			20/1	0.156	C	1.000	20/1			SALES FLOOR STEAMER		6
7	c	SALES DISPLAY TRACK LTG			15/1	0.864	A	1.000	20/1			SALES FLOOR STEAMER		8
9	c	SALES DISPLAY TRACK LTG			15/1	0.924	B	1.000	20/1			SALES FLOOR STEAMER		10
11	a	SALES GEN. TRACK LTG			15/1	1.116	C	1.000	20/1			SALES FLOOR STEAMER		12
13	b	SALES GEN. TRACK LTG			15/1	1.316	A	1.000	20/1			SALES FLOOR STEAMER		14
15	a	FITT. RM. GENERAL LTG			20/1	0.120	B	1.000	20/1			SALES FLOOR STEAMER		16
17	b	FITT. RM. GENERAL LTG			20/1	0.140	C	1.000	20/1			SALES FLOOR STEAMER		18
19	c	SALES DECORATIVE LTG			20/1	0.180	A	0.500	20/1			CASHWRAP RECEPTACLE		20
21		NON-SALES/B.O.H. LTG		L	20/1	1.304	B	0.500	20/1			CASHWRAP RECEPTACLE		22
23		SALES EMEXITINL LTG		L	20/1	0.584	C	0.180	20/1			BACKWRAP RECEPTACLE		24
25		OFFICE RECEPTACLES			20/1	1.440	A	0.500	20/1			BACKWRAP VIDEO WALL		26
27		SALES/F.R. GEN RECEPTS.			20/1	1.260	B	0.360	20/1			DESK RECEPTACLES		28
29		CCTV			20/1	0.250	C	1.650	20/1			(E) HOT WATER HEATER		30
31		NETWORK RACK			20/1	0.300	A	0.000	20/1			SPARE		32
33		SOUND SYSTEM & RECEPT			20/1	0.380	B	0.540	20/1			RECEIVING DESK RECEPTS		34
35		REFRIGERATOR & RECEPTS			20/1	1.160	C	1.000	20/1			SALES FLOOR TV MONITOR		36
37		MICROWAVE			20/1	0.600	A	0.000	20/1			SPARE		38
39		NON-SALES GEN. RECEPTS			20/1	1.440	B	0.000	20/1			SPARE		40
41		(E)TELEBD RECEPTACLE			20/1	0.360	C	0.200	20/1			LIGHTING CONTROLS/T.C.		42
43		SPACE	----	----	----	0.000	A	0.000	----	----		SPACE		44
45		SPACE	----	----	----	0.000	B	0.000	----	----		SPACE		46
47		SPACE	----	----	----	0.000	C	0.000	----	----		SPACE		48
49		SPACE	----	----	----	0.000	A	5.704				AIR CURTAIN AC-1 (CKT 1)		50
51		SPACE	----	----	----	0.000	B	5.704	60/3	H				52
53		SPACE	----	----	----	0.000	C	5.704						54
55		SPACE	----	----	----	0.000	A	4.671				AIR CURTAIN AC-1 (CKT 2)		56
57		SPACE	----	----	----	0.000	B	4.671	50/3	H				58
59		SPACE	----	----	----	0.000	C	4.671						60

Notes
* All circuit breakers to be 20-Amp, 1-Pole unless otherwise noted.

Actual Load Totals:			
Ph. A	20.275 kw	168.8	A
Ph. B	20.743 kw	172.7	A
Ph. C	20.121 kw	167.5	A
Total	61.139 kw	169.7	A

(All Phases to be balanced to within 7% using Actual Load Totals.)

Breaker Options
L - Handle lock-on device
H - Heating, A/C & Refrigeration
G - Ground Fault Circuit Interrupter

Zone/Note: Zone - Lighting Control Zones; Notes - IG = Isolated Ground Circuit

PANEL 'L' ELECTRICAL LOAD SUMMARY (120/208V SYSTEM)

DESCRIPTION	ACTUAL CONNECTED KW/KVA	N.E.C. CONNECTED KW/KVA	N.E.C. DEMAND FACTOR	N.E.C. DEMAND KW/KVA
LIGHTING	3.528	3.528	1.25	4.410
TRACK LIGHTING ***	4.220	7.200	60 Amps x 120V	7.200
SHOW WINDOW LIGHTING **	0.696	4.800	24 ' x 200w / FT	4.800
RECEPTACLES	15.580	15.580	1.0= 10 KW + 0.5 REMAINING KW	12.790
MISCELLANEOUS	4.340	4.340	1.0	4.340
FIXED ELECTRIC HEATING *	31.125	31.125	1.0	31.125
HVAC SYSTEM *	0.000	0.000	125% OF LARGEST ****	0.000
TOTAL	61.139	68.223		66.315

NOTES
* USE GREATER LOAD OF THE TWO CATAGORIES
** NEC ARTICLE 220-43 REQUIREMENT (200VA / FT OR ACTUAL CONNECTED)
*** NEC ARTICLE 220-43-(B) EXCEPTION:TOTAL OF ALL CURRENT LIMITING DEVICES
**** 125% OF THE LARGEST MOTOR OR COMPRESSOR ALREADY INCLUDED IN ACTUAL & NEC CONNECTED KW/KVA TOTAL

N.E.C. DEMAND KVA x 1000 / SYSTEM VOLTAGE x √ 3 = MINIMUM FEEDER AMPERAGE

66.315 x 1000 / 208 x 1.73 = 184.3 AMPS

CALCULATED PER 2014 NEC

Panel Wiring Schedule (3-phase)

Panelboard	P	Voltage	120/208	Phase	3	Wire	4
Panel Type	Square-D Co. Type "NQ"	Mains	200A MCB	Mains Rating	225A	AIC Rating	10,000
NEMA Type Enclosure	1	Mounting	Surface	Options		Note	

Ckt. No.	Zone/ Note	Load Description	Equip #	Brkr Opts	Brkr Size*	Actual KW	Phase	Actual KW	Brkr Size*	Brkr Opts	Equip #	Load Description	Zone/ Note	Ckt. No.
1						5.164	A	5.164						2
3		(LL) RTU-1		H	50/3	5.164	B	5.164	50/3	H		(LL) RTU-3		4
5						5.164	C	5.164						6
7						5.164	A	5.164						8
9		(LL) RTU-2		H	50/3	5.164	B	5.164	50/3	H		(LL) RTU-4		10
11						5.164	C	5.164						12
13		SPARE			20/1	0.000	A	0.000	----	----		SPACE		14
15		SPARE			20/1	0.000	B	0.000	----	----		SPACE		16
17		SPACE	----	----	----	0.000	C	0.000	----	----		SPACE		18
19		SPACE	----	----	----	0.000	A	0.000	----	----		SPACE		20
21		SPACE	----	----	----	0.000	B	0.000	----	----		SPACE		22
23		SPACE	----	----	----	0.000	C	0.000	----	----		SPACE		24
25		SPACE	----	----	----	0.000	A	1.500	20/1	----		HANDDRYER (WOMENS RM)		26
27		SPACE	----	----	----	0.000	B	1.500	20/1	----		HANDDRYER (MENS RM)		28
29		HVAC RECEPTACLES			20/1	0.720	C	0.400	20/1	L		(E) F.A. BOOSTER PNL		30

Notes
* All circuit breakers to be 20-Amp, 1-Pole unless otherwise noted.

Actual Load Totals:			
Ph. A	22.156 kw	184.5	A
Ph. B	22.156 kw	184.5	A
Ph. C	21.776 kw	181.3	A
Total	66.088 kw	183.4	A

(All Phases to be balanced to within 7% using Actual Load Totals.)

Breaker Options
L - Handle lock-on device
H - Heating, A/C & Refrigeration
G - Ground Fault Circuit Interrupter

Zone/Note: Zone - Lighting Control Zones; Notes - IG = Isolated Ground Circuit

PANEL 'P' ELECTRICAL LOAD SUMMARY (120/208V SYSTEM)

DESCRIPTION	ACTUAL CONNECTED KW/KVA	N.E.C. CONNECTED KW/KVA	N.E.C. DEMAND FACTOR	N.E.C. DEMAND KW/KVA
LIGHTING	0.000	0.000	1.25	0.000
RECEPTACLES	0.720	0.720	1.0= 10 KW + 0.5 REMAINING KW	0.720
ELECTRIC WATER HEATER	0.000	0.000	1.0	0.000
MISCELLANEOUS	3.400	3.400	1.0	3.400
MOTORS	0.000	0.000	1.0	0.000
FIXED ELECTRIC HEATING	0.000	0.000	1.0	0.000
HVAC SYSTEM	61.968	61.968	125% OF LARGEST ****	61.968
TOTAL	66.088	66.088		66.088

NOTES
* USE GREATER LOAD OF THE TWO CATAGORIES
** NEC ARTICLE 220-43 REQUIREMENT (200VA / FT OR ACTUAL CONNECTED)
*** NEC ARTICLE 220-43-(B) EXCEPTION:TOTAL OF ALL CURRENT LIMITING DEVICES
**** 125% OF THE LARGEST MOTOR OR COMPRESSOR ALREADY INCLUDED IN ACTUAL & NEC CONNECTED KW/KVA TOTAL

N.E.C. DEMAND KVA x 1000 / SYSTEM VOLTAGE x √ 3 = MINIMUM FEEDER AMPERAGE

66.088 x 1000 / 208 x 1.73 = 183.7 AMPS

CALCULATED PER 2014 NEC

Voltage Drop Calculator

Result

Voltage drop: **3.75**
Voltage drop percentage: **1.80%**
Voltage at the end: **204.25**

Please note that the result is an estimation based on normal condition. The actual voltage drop can vary depend on the condition of the wire, the conduit being used, the temperature, the connector, the frequency etc. But, in most cases, it will be very close.

Wire Material	Copper	
Wire Size	3/0 AWG (168 kcmil)	
Voltage	208	
Phase	AC 3-phase	
Number of conductors	single set of conductors	
Distance*	175	feet
Load current	200	Amps

Calculate

* Please use one-way distance to the load. Not round trip distance.

Voltage Drop Calculator

Result

Voltage drop: **3.68**
Voltage drop percentage: **3.12%**
Voltage at the end: **114.22**

Please note that the result is an estimation based on normal condition. The actual voltage drop can vary depend on the condition of the wire, the conduit being used, the temperature, the connector, the frequency etc. But, in most cases, it will be very close.

Wire Material	Copper	
Wire Size	10 AWG (10.4 kcmil)	
Voltage	117.9	
Phase	AC single phase	
Number of conductors	single set of conductors	
Distance*	115	feet
Load current	16	Amps

Calculate

* Please use one-way distance to the load. Not round trip distance.

FOR BRANCH DISTRIBUTION CIRCUITS LONGER THAN 70 FEET, REFER TO WIRE SIZING GUIDELINES IN SPECIFICATIONS ON SHEET E5.0 FOR WIRE SIZING DESIGNED TO LIMIT VOLTAGE DROP OF BRANCH CIRCUITS BELOW 3% FOR A TOTAL OF LESS THAN 5% TOTAL VOLTAGE DROP. (ALL CALCULATIONS MADE USING THE SAME METHOD OF EACH LENGTH/WIRE SIZE)

PROFESSIONAL CERTIFICATION. I HEREBY CERTIFY THAT THESE DOCUMENTS WERE PREPARED OR APPROVED BY ME, AND THAT I AM A DULY LICENSED PROFESSIONAL ENGINEER UNDER THE LAWS OF THE STATE OF MARYLAND, LICENSE NO. 32448, EXPIRATION DATE: 02-07-2020 .

PANEL SCHEDULES, LOAD SUMMARIES, AND CALCULATIONS | A

OWNER:
5A LANDS' END LANE
DODGEVILLE, WI 53595

ARCHITECT / ENGINEER:
SHREMSHOCK
Shremshock Engineering, Inc.
7400 W. Campus Rd. Suite 150 New Albany, OH 43054
t: 614 545 4550 | f: 614 545 4555 | shremshock.com

©2019 THE ARCHITECT / ENGINEER ASSUMES NO RESPONSIBILITY FOR THE USE OF THESE PLANS FOR ANY PROJECT OTHER THAN SPECIFICALLY AUTHORIZED BY THEM AND SIGNED AND SEALED FOR SUCH SPECIFIC LOCATION IN THE STATE, PROVINCE OR TERRITORY SHOWN ON THE SEAL. THIS BUILDING USE IS ONLY APPLICABLE IN AREAS MEETING THE STATED DESIGN CRITERIA.

LANDS' END

STORE NO: TBD

PROJECT LOCATION:
CONGRESSIONAL PLAZA
1667 ROCKVILLE PIKE
SPACE #06
ROCKVILLE, MD 20852

DESIGN TYPE: -

REVISIONS:

REQUIRED BY:		DATE
1	TAV CLIENT, LANDLORD & B.D. COMMENTS	07/19/2019

* INDICATES NO REVISION TO THIS SHEET

ELECTRICAL PANEL SCHEDULES, RISERS & DETAILS

DRAWN BY: TAV | CHECKED BY: RAP

DATE ISSUED: 06/07/2019
PROJECT NO: 190148
DRAWING NO: E4.0

26 05 00 COMMON WORK RESULTS FOR ELECTRICAL

A. THE FOLLOWING TERMS APPLY TO WORK PERFORMED UNDER THIS CONTRACT:

1. ANY REFERENCE TO TENANT OR TENANT'S CONSTRUCTION MANAGER OR FURNISHED BY ANY OF THE ABOVE REFERS TO LANDS' END.
2. DRAWINGS AND GENERAL PROVISIONS OF CONTRACT, INCLUDING GENERAL AND SUPPLEMENTARY CONDITIONS AND OTHER SPECIFICATIONS SECTIONS, APPLY TO THIS AND THE OTHER SECTIONS OF DIVISION 26 THROUGH 28.
3. THE CONTRACTOR FOR THIS WORK IS REQUIRED TO READ THE SPECIFICATIONS AND REVIEW DRAWINGS FOR ALL DIVISIONS OF WORK AND IS RESPONSIBLE FOR THE COORDINATION OF THIS WORK AND THE WORK OF THE SUBCONTRACTORS WITH ALL DIVISIONS OF WORK. IT IS THIS CONTRACTOR'S RESPONSIBILITY TO PROVIDE THE SUBCONTRACTORS WITH A COMPLETE SET OF BID DOCUMENTS.
4. THIS CONTRACTOR IS RESPONSIBLE FOR SCHEDULING THE COMPLETION AND INSPECTION OF THIS WORK AND THE WORK OF THE SUBCONTRACTORS TO COMPLY WITH THE TENANT'S SCHEDULE AND THE PROJECT COMPLETION DATE.
5. THIS CONTRACTOR SHALL VISIT THE SITE PRIOR TO BID SUBMISSION TO DETERMINE CONDITIONS AFFECTING THE WORK. ANY ITEMS WHICH ARE NOT COVERED IN THE BID DOCUMENTS OR ANY PROPOSED SUBSTITUTIONS SHALL BE LISTED SEPARATELY AND QUALIFIED IN THE CONTRACTOR'S BID. BID SUBMISSION SHALL SERVE AS EVIDENCE OF KNOWLEDGE OF EXISTING CONDITIONS AND ANY MODIFICATIONS WHICH ARE REQUIRED TO MEET THE INTENT OF THE DRAWINGS AND SPECIFICATIONS. FAILURE TO VISIT THE SITE DOES NOT RELIEVE THE CONTRACTOR OF RESPONSIBILITY IN PERFORMANCE OF WORK.
6. REFER TO RESPONSIBILITY SCHEDULE ON THE ARCHITECTURAL DRAWINGS FOR INFORMATION IN REGARD TO RESPONSIBILITY OF WORK OR ITEMS WHICH MAY AFFECT BID.

B. PROVIDE MATERIALS AND EQUIPMENT AND PERFORM LABOR REQUIRED TO INSTALL NEW COMPLETE ELECTRICAL SYSTEM AS INDICATED ON DRAWINGS, AS REQUIRED BY CODE AND AS SPECIFIED HEREIN, IN DIVISIONS 26, 27, AND 28. WORK SHALL INCLUDE, BUT NOT BE LIMITED TO, THE FOLLOWING:

1. TEMPORARY SERVICE AS REQUIRED.
2. EMERGENCY AND EXIT LIGHTING SYSTEMS.
3. CONDUIT AND CABLES FOR TELEPHONE AND DATA SYSTEMS AS SHOWN ON THE DRAWINGS.
4. ELECTRICAL PANEL AND BRANCH CIRCUIT WIRING.
5. WIRING DEVICES AND PLATES.
6. LIGHTING FIXTURES AND LAMPS, INSTALLATION AND WIRING.
7. LIGHTING CONTROLS.
8. ELECTRICAL CONNECTIONS TO EQUIPMENT FURNISHED BY OTHERS, SIGNS, CORNICE LIGHTING, CASE LIGHTING, ETC., AS SHOWN ON DRAWINGS.
9. INSTALLATION OF CONDUIT AND CABLES FOR SOUND SYSTEM AS SHOWN ON DRAWINGS.
10. SMOKE/FIRE ALARM WIRING, DEVICES AND CONDUIT, AS SHOWN OR DESCRIBED ON DRAWINGS OR AS NECESSARY TO MEET LANDLORD, STATE, LOCAL, INSURANCE AND FIRE DEPARTMENT REQUIREMENTS.
11. INSTALLATION OF CONDUITS STUBBED TO ABOVE CEILING FOR HVAC. ALSO, ANY ADDITIONAL CONDUIT FOR HVAC CONTROL EQUIPMENT WHERE PLENUM RATED CABLES ARE NOT PERMITTED.
12. THE GENERAL CONTRACTOR SHALL PAY FOR ALL ELECTRICITY PRIOR TO STORE MERCHANDISING, AND INCLUDE COST IN BID.

C. WORK WHICH SHALL BE PERFORMED BY OTHERS, UNLESS NOTED OTHERWISE, INCLUDES THE FOLLOWING:

1. TEMPERATURE CONTROL WIRING THAT IS FURNISHED BY OTHERS PRE-WIRED IN UNITS.
2. TELEPHONES AND FINAL CONNECTION OF WIRING THERETO.
3. INTERNAL WIRING OF EQUIPMENT FURNISHED AND PRE-WIRED BY OTHERS.
4. SECURITY SYSTEM FURNISHED AND INSTALLED BY SECURITY CONTRACTOR.

D. ELECTRICAL EQUIPMENT FURNISHED BY OTHER TRADES OR BY TENANT AND SPECIFIED IN OR SHOWN ON CONTRACT DOCUMENTS SHALL BE INSTALLED AND CONNECTED BY GENERAL CONTRACTOR, EXCEPT AS OTHERWISE NOTED. PROVIDE BRANCH CIRCUIT CONNECTIONS TO ELECTRICALLY-OPERATED EQUIPMENT FURNISHED BY OTHERS AS SPECIFIED IN OR SHOWN ON THE CONTRACT DOCUMENTS. TEMPORARY WIRING FOR OTHER CONTRACTORS SHALL BE INSTALLED BY THE GENERAL CONTRACTOR WHO SHALL BE ENTIRELY RESPONSIBLE TO THE TENANT FOR THE SAFE AND SATISFACTORY OPERATION OF SAID TEMPORARY WIRING. CONTRACTOR REQUIRING SUCH TEMPORARY WIRING SHALL PAY FOR DAMAGES TO PROPERTY RESULTING FROM ITS USE. COMPLY WITH LATEST REQUIREMENTS OF OCCUPATIONAL SAFETY AND HEALTH ACT (OSHA). PROVIDE PERSONNEL GROUND-FAULT PROTECTION ON TEMPORARY POWER AND LIGHTING CIRCUITS 30 AMPERES OR LESS. GROUND-FAULT CIRCUIT INTERRUPTERS (GFCI) ON CONSTRUCTION CIRCUITS ARE NOT REQUIRED WHERE CIRCUIT IS A PERMANENT CIRCUIT TO BE A PART OF THE COMPLETED BUILDING. HOWEVER, CONTRACTOR SHALL PROVIDE APPROVED CORD SETS INCORPORATING GFCI PROTECTION FOR PERSONNEL. SEE THE LOCALLY-ADOPTED EDITION OF THE N.E.C. FINISH PAINTING IS TO BE PERFORMED BY GENERAL CONTRACTOR EXCEPT THAT THIS CONTRACTOR SHALL RESTORE TO ORIGINAL CONDITION ANY PAINTING DEFACED BY THIS CONTRACTOR AFTER ORIGINAL PAINTING.

E. GENERAL CONTRACTOR SHALL PERFORM CUTTING, CHASING, OR CHANNELING AND PATCHING REQUIRED FOR WORK UNDER THIS DIVISION. CUTTING SHALL HAVE PRIOR APPROVAL BY TENANT'S CONSTRUCTION MANAGER AND THE LANDLORD. PATCHING IS TO BE "AS NEW" CONDITION.

F. INSTALL ELECTRICAL WORK AS TO BE READILY ACCESSIBLE FOR OPERATING, SERVICING, MAINTAINING AND REPAIRING. THIS CONTRACTOR IS RESPONSIBLE FOR PROVIDING SUFFICIENT SERVICE ACCESS TO ALL EQUIPMENT.

G. ANY ACCESS PANELS REQUIRED, BUT NOT SPECIFIED OR SHOWN ON DRAWINGS, SHALL BE FURNISHED BY GENERAL CONTRACTOR WITH DESIGN TO BE APPROVED BY ARCHITECT BEFORE STARTING INSTALLATION.

H. THE DRAWINGS AND SPECIFICATIONS ARE INTENDED TO SUPPLEMENT EACH OTHER AND ANY MATERIAL OR LABOR CALLED FOR IN ONE SHALL BE PROVIDED EVEN THOUGH NOT SPECIFICALLY MENTIONED IN BOTH. ANY MATERIAL OR LABOR WHICH IS NEITHER SHOWN ON THE DRAWINGS NOR CALLED FOR IN THE SPECIFICATIONS, BUT WHICH IS NECESSARY TO COMPLETE THE WORK OR WHICH IS USUALLY INCLUDED IN WORK OF SIMILAR CHARACTER, SHALL BE PROVIDED AS PART OF CONTRACT.

I. PERFORM WORK IN ACCORDANCE WITH:

1. THE NATIONAL ELECTRICAL CODE (N.E.C.).
2. STATE, CITY, AND COUNTY BUILDING CODES AND ORDINANCES.
3. NATIONAL BOARD OF FIRE UNDERWRITERS.
4. CERTAIN CODES AND STANDARDS AS SET UP BY VARIOUS TECHNICAL SOCIETIES SUCH AS UL, NEMA, NECA, IEEE, ASTM, IES, IPCEA, AND ANSI.
5. THIS WORK SHALL BE GOVERNED ALSO BY LOCAL INSPECTOR'S REQUIREMENTS.
6. FEDERAL OCCUPATIONAL SAFETY AND HEALTH ACT STANDARDS.
7. AMERICANS WITH DISABILITIES ACT.

J. GENERAL CONTRACTOR SHALL INQUIRE INTO AND COMPLY WITH APPLICABLE CODES, ORDINANCES, AND REGULATIONS. THIS CONTRACTOR SHALL INCLUDE CHANGES REQUIRED BY CODES IN THE BID AND IF THESE CHANGES ARE NOT INCLUDED IN THE BID, THEY MUST BE QUALIFIED AS A SEPARATE LINE ITEM IN THE BID. AFTER CONTRACT IS ISSUED, NO ADDITIONAL COST DUE TO CODE ISSUES SHALL BE REIMBURSED BY TENANT TO THE CONTRACTOR.

K. WHERE THE DRAWINGS OR SPECIFICATIONS CALL FOR ITEMS WHICH EXCEED CODE OR THE LANDLORD OR TENANT CRITERIA, THE CONTRACTOR IS RESPONSIBLE FOR FURNISHING AND INSTALLING THE SYSTEM WITH THE MOST STRINGENT REQUIREMENTS AS DESIGNED AND DESCRIBED ON THESE DRAWINGS, UNLESS NOTED OTHERWISE.

L. UNLESS SPECIFICALLY NOTED OTHERWISE, MATERIALS, PRODUCTS, AND EQUIPMENT, INCLUDING COMPONENTS THEREOF, SHALL BE NEW, UNDERWRITERS LABORATORIES LISTED AND LABELED AND SIZED IN CONFORMITY WITH REQUIREMENTS OF THE N.E.C., STATE, AND LOCAL CODES, WHICHEVER IS MORE STRINGENT.

M. PERMITS REQUIRED BY LAWS, ORDINANCES AND BUILDING CODES HAVING JURISDICTION SHALL BE OBTAINED AT PROPER TIME BY AND AT THE EXPENSE OF THE GENERAL CONTRACTOR.

N. ELECTRICAL WORK SHALL BE INSPECTED BY THE GOVERNMENTAL AGENCY HAVING JURISDICTION, INCLUDING LOCAL INSPECTION AUTHORITIES.

O. WHERE TRADE NAMES AND MANUFACTURERS ARE USED ON THE DRAWINGS OR IN THE SPECIFICATIONS, THE EXACT EQUIPMENT SHALL BE USED AS A MINIMUM FOR THE BASE BID. MANUFACTURERS CONSIDERED AS AN EQUAL OR BETTER IN ALL ASPECTS TO THAT SPECIFIED WILL BE SUBJECT TO APPROVAL IN WRITING, THROUGH SHOP DRAWING SUBMITTAL PROCESS, BY TENANT'S CONSTRUCTION MANAGER PRIOR TO ACCEPTANCE. THE USE OF UNAUTHORIZED EQUIPMENT SHALL BE SUBJECT TO REMOVAL AND REPLACEMENT AT THE CONTRACTOR'S EXPENSE.

P. GENERAL CONTRACTOR SHALL SUBMIT ONLY SUBSTITUTION REQUESTS TO TENANT'S CONSTRUCTION MANAGER FOR APPROVAL. SUBMISSIONS SHALL BE MADE EARLY ENOUGH IN PROJECT TO ALLOW SEVEN (7) WORKING DAYS FOR TENANT'S CONSTRUCTION MANAGER'S REVIEW WITHOUT CAUSING DELAYS OR CONFLICTS TO THE JOB'S PROGRESS. SUBMITTALS SHALL BEAR THE STAMP OF THE GENERAL CONTRACTOR AND/OR SUB-CONTRACTOR SHOWING THAT THEY HAVE REVIEWED AND CONFIRMED THAT THE SUBMITTALS ARE IN CONFORMANCE WITH THE CONTRACT DRAWINGS AND SPECIFICATIONS OR INDICATE WHERE EXCEPTIONS HAVE BEEN TAKEN.

Q. FOR PHASED STORE CONSTRUCTION, THIS CONTRACTOR IS TO INCLUDE IN THIS BID NECESSARY ELECTRICAL SERVICE CHANGES REQUIRED TO KEEP THE OPERATING PHASE OF THE STORE'S ELECTRIC SERVICE IN OPERATION. CONTRACTOR MUST SCHEDULE WITH TENANT'S CONSTRUCTION MANAGER AND LANDLORD (IN WRITING) ONE WEEK PRIOR TO SHUT DOWN OF THE P.O.S., CASH REGISTERS, ELECTRICAL, TELEPHONE OR FIRE ALARM SYSTEMS. ADVISE GENERAL CONTRACTOR AND TENANT AT TIME OF BID IF CONFLICTS EXIST.

R. GENERAL CONTRACTOR SHALL BE RESPONSIBLE FOR THE COORDINATION OF THE DEMOLITION OF EXISTING WORK. COORDINATE EXISTING EQUIPMENT TO BE LEFT INTACT AND ADVISE TENANT'S CONSTRUCTION MANAGER AT TIME OF BID.

S. THIS CONTRACTOR SHALL INCLUDE, AND WILL BE HELD RESPONSIBLE FOR, THE REMOVAL OF EXISTING CONDUIT, FIRE ALARM SYSTEM, SWITCH GEAR, PITCH POCKETS AND EQUIPMENT, ETC. UNLESS SPECIFICALLY NOTED OTHERWISE. CONTRACTOR MUST VERIFY WITH THE LANDLORD ALL PRESUMED ABANDONED EQUIPMENT, CONDUIT AND SWITCH GEAR PRIOR TO REMOVAL. PITCH POCKETS SHALL BE REMOVED AND THE ROOF PATCHED, AS REQUIRED BY THE LANDLORD. EXTRANEOUS ITEMS IN THE SPACE OR ON THE ROOF NOT APPLICABLE TO THE NEW WORK SHALL BE REMOVED AND ROOF/WALL/FLOOR PATCHED/REPAIRED TO LIKE NEW CONDITION. EXISTING ABANDONED CONDUIT OR EQUIPMENT IN THE FLOOR, EMBEDDED IN CONCRETE, OR OTHERWISE INACCESSIBLE, ARE TO BE CUT OFF AND SEALED BELOW OR WITHIN FLOOR OR WALL LEVEL WHEN THEY ARE NOT TO BE REUSED IN THIS PROJECT. IF REQUIRED BY LANDLORD OR CODES, ABANDONED CONDUIT MUST BE REMOVED TO POINT OF ORIGIN. CONFIRM EXTENT OF DEMOLITION PRIOR TO BID AND INCLUDE IN PROPOSAL.

T. PROVIDE SLEEVES TO PROTECT EQUIPMENT OR FACILITIES IN THE INSTALLATION. EACH SLEEVE SHALL EXTEND THROUGH IT'S RESPECTIVE FLOOR, WALL OR PARTITION AND SHALL BE CUT FLUSH WITH EACH SURFACE EXCEPT SLEEVES THAT PENETRATE THE FLOOR, WHICH SHALL EXTEND 2" ABOVE THE FLOOR.

U. FIRE SEAL SLEEVES AND OPENINGS THROUGH FIRE-RATED WALLS AND FLOORS WITH CALCIUM SILICATE, SILICONE "RTV" FOAM, "3M" FIRE RATED SEALANTS OR EQUAL, SO AS TO RETAIN THEIR FIRE RATING.

V. SLEEVES IN BEARING AND MASONRY WALLS, FLOORS AND PARTITIONS SHALL BE STANDARD-WEIGHT STEEL PIPE FINISHED WITH SMOOTH EDGES. FOR OTHER THAN MASONRY PARTITIONS, THROUGH SUSPENDED CEILINGS, OR FOR CONCEALED VERTICAL CONDUIT, SLEEVES SHALL BE NO. 22 U.S.G. GALVANIZED STEEL MINIMUM.

W. HANGERS SHALL INCLUDE MISCELLANEOUS STEEL SUCH AS ANGLE IRON, WIRE, UNISTRUT, C-CLAMPS WITH RETAINING CLIPS, CHANNELS, HANGER RODS, ETC., NECESSARY FOR THE INSTALLATION OF WORK.

X. FASTEN HANGERS TO BUILDING STEEL, CONCRETE, OR MASONRY, BUT NOT TO OTHER CONDUIT OR PIPING. HANGERS UPPER ATTACHMENT MUST BE SUPPORTED FROM THE TOP OF THE BAR JOIST. HANGING FROM METAL DECK IS NOT PERMITTED. WHERE INTERFERENCES OCCUR, IN ORDER TO SUPPORT CONDUIT, THE CONTRACTOR MUST INSTALL TRAPEZE-TYPE HANGERS OR SUPPORTS WHICH SHALL BE LOCATED WHERE THEY DO NOT INTERFERE WITH ACCESS TO FIRE DAMPERS, VALVES, JUNCTION BOXES, ACCESS DOORS, OTHER EQUIPMENT SERVICE REQUIREMENTS AND/OR OTHER TRADES. HANGER TYPES AND INSTALLATION METHODS ARE SUBJECT TO LANDLORD CRITERIA.

Y. UPON COMPLETION OF THE WORK, GENERAL CONTRACTOR SHALL FURNISH TO THE ARCHITECT A CERTIFICATE OF INSPECTION AND APPROVAL FROM THE ABOVE DEPARTMENT BEFORE FINAL PAYMENT ON CONTRACT WILL BE ALLOWED.

Z. TEST WIRING AND CONNECTIONS FOR CONTINUITY AND GROUNDS BEFORE EQUIPMENT IS CONNECTED. WHEN DIRECTED BY ARCHITECT, DEMONSTRATE BY PROPER VOLTAGE MEGGER TEST OF INSULATION RESISTANCE OF CONDUCTORS AND REPLACE CONDUCTORS WHICH FAIL SAID TESTS UNTIL CONDUCTORS ARE FREE FROM INSULATION FAULTS.

AA. ELECTRICAL LAYOUTS ARE SCHEMATIC. EXACT LOCATIONS ARE DETERMINED BY EXACT LOCATION OF EQUIPMENT, ETC., AND MAY BE REVISED TO SUIT THE CONSTRUCTION CONDITIONS AND AID IN COORDINATION WITH WORK OF OTHER CONTRACTORS. WHERE DRAWINGS, EXISTING SITE CONDITIONS, SPECIFICATIONS OR OTHER TRADES CONFLICT OR ARE UNCLEAR, ADVISE THE GENERAL CONTRACTOR IN WRITING PRIOR TO SUBMITTAL OF BID. THE GENERAL CONTRACTOR IS RESPONSIBLE TO ADVISE TENANT'S CONSTRUCTION MANAGER IN WRITING OF ANY VARIATIONS TO CONTRACT DOCUMENTS PRIOR TO SUBMISSION OF THE BID. OTHERWISE, TENANT'S CONSTRUCTION MANAGER'S INTERPRETATION OF CONTRACT DOCUMENTS OR CONDITIONS SHALL BE FINAL WITH NO ADDITIONAL COMPENSATION PERMITTED.

AB. ELECTRICAL DRAWINGS ARE INTENDED TO INDICATE APPROXIMATE LOCATIONS OF SWITCHES, RECEPTACLES, LIGHTING FIXTURES AND OTHER ITEMS OF VARIOUS ELECTRICAL SYSTEMS OF PROJECT. EXACT LOCATIONS AND ROUGH-IN DIMENSIONS FOR WORK AND EQUIPMENT SHALL BE OBTAINED FROM ARCHITECT OR ARCHITECT'S REPRESENTATIVE AS WORK PROGRESSES. SHOULD THE GENERAL CONTRACTOR FAIL TO PROPERLY OBTAIN SUCH LOCATIONS OR DIMENSIONS, THE GENERAL CONTRACTOR SHALL CHANGE THIS WORK AT THE GENERAL CONTRACTOR'S EXPENSE WHEN REQUESTED BY ARCHITECT. ARCHITECT RESERVES THE RIGHT TO MAKE MINOR CHANGES IN LOCATION OF ELECTRICAL WORK OR EQUIPMENT PRIOR TO ROUGHING IN WITH NO ADDITIONAL COST TO TENANT. TENANT'S CONSTRUCTION MANAGER RESERVES THE RIGHT TO RELOCATE OUTLETS OR FIXTURES BEFORE THEY ARE INSTALLED WITHOUT ADDITIONAL COST.

AC. THE ARCHITECT RESERVES THE RIGHT TO DIRECT REMOVAL AND REPLACEMENT OF ITEMS WHICH, IN THE ARCHITECT'S OPINION, DO NOT PRESENT AN ORDERLY OR REASONABLY NEAT OR WORKMANLIKE APPEARANCE, PROVIDED THAT SUCH ITEM CAN BE PROPERLY INSTALLED IN SUCH ORDERLY WAY BY METHODS USUAL IN SUCH WORK, OR WHICH DOES NOT COMPLY WITH CONTRACT DRAWINGS OR SPECIFICATIONS. SUCH REMOVALS OR REPLACEMENTS SHALL BE DONE BY CONTRACTOR AT CONTRACTOR'S EXPENSE WHEN SO DIRECTED IN WRITING BY ARCHITECT.

AD. MAINTAIN ONE COPY OF DRAWINGS ON THE JOB SITE TO RECORD DEVIATIONS FROM CONTRACT DRAWINGS, SUCH AS:
1. LOCATION OF JUNCTION BOXES AND RECEPTACLES.
2. REVISIONS, ADDENDUMS, AND CHANGE ORDERS.
3. SIGNIFICANT DEVIATIONS MADE NECESSARY BY FIELD CONDITIONS, APPROVED EQUIPMENT SUBSTITUTIONS, AND CONTRACTOR'S COORDINATION WITH OTHER TRADES.

AE. AT COMPLETION OF PROJECT AND BEFORE FINAL APPROVAL, MAKE FINAL CORRECTIONS TO DRAWINGS AND CERTIFY THE ACCURACY OF EACH PRINT BY SIGNATURE THEREON. PLACE ONE COPY OF DRAWINGS STAMPED "DO NOT REMOVE" IN DRAWING TUBE LOCATED NEXT TO THE ELECTRICAL PANELS (SEE ARCHITECTURAL DRAWINGS FOR LOCATION). A SECOND AS-BUILT SET SHALL BE SENT TO TENANT'S OFFICES.

AF. MATERIALS AND EQUIPMENT INSTALLED AS A PART OF THE WORK SHALL MEET THE REQUIREMENTS OF THE CONTRACT DOCUMENTS.

AG. SUBMIT SHOP DRAWINGS PER THE DOCUMENTS PROVIDED BY THE TENANT.

AH. MANUFACTURER'S CATALOG CUTS MAY BE SUBMITTED FOR STANDARD CATALOG LIGHTING FIXTURES AND OTHER EQUIPMENT. CATALOG CUTS MAY BE MARKED UP TO MEET THE PROJECT SPECIFICATIONS. CUTS SHALL BE MARKED TO INDICATE MODEL NUMBER, SIZE, TYPE, COLOR, RATING, ETC., OF THE ITEM TO BE FURNISHED.

AI. PROVIDE INSTRUCTION TO TENANT'S OPERATING PERSONNEL AS NECESSARY, SHOWING LOCATIONS AND PROPER OPERATION OF MAJOR ITEMS OF EQUIPMENT AND SYSTEM COMPONENTS AND REFERRING TO THE OPERATING INSTRUCTION MANUAL DESCRIBED BELOW AS A GUIDE.

AJ. GENERAL CONTRACTOR SHALL GUARANTEE WORKMANSHIP AND MATERIALS, EXCEPT FOR TENANT-SUPPLIED MATERIALS, FOR A PERIOD OF ONE YEAR FROM THE DATE OF ACCEPTANCE (IN WRITING) OF THE INSTALLATION BY TENANT'S CONSTRUCTION MANAGER/ENGINEERING MANAGER AND LEAVE THIS WORK IN PERFECT ORDER AT COMPLETION.

AK. SHOULD DEFECTS DEVELOP WITHIN GUARANTEE PERIOD, GENERAL CONTRACTOR SHALL, UPON NOTICE OF SAME, REMEDY SUCH DEFECTS AND HAVE DAMAGES TO OTHER WORK OR FURNISHINGS CAUSED BY DEFECTS OR WORK OR CORRECTIONS TO SAME REPAIRED AND/OR REPLACED AT THIS EXPENSE TO CONDITION BEFORE SUCH DEFECTS OR DAMAGE.

AL. COMPILE TWO (2) WRITTEN MANUALS OF OPERATING INSTRUCTIONS INCLUDING COPIES OF SHOP DRAWINGS AND A LISTING OF EQUIPMENT SUPPLIERS. ASSEMBLE IN 8-1/2" X 11" HARD BACKED INDEXED BINDER. MATERIAL SHALL BE AS FOLLOWS:

1. TITLE PAGE: TITLE OF JOB, LANDLORD, TENANT'S ADDRESS, DATE OF SUBMISSION, CONTRACTOR, AND ENGINEER.
2. INDEX
3. LIST OF MAJOR EQUIPMENT USED IN PROJECT ACCOMPANIED BY CONTRACTOR PURCHASE ORDER NUMBERS AND SUPPLIERS' NAMES AND ADDRESSES.
4. ONE COPY OF EACH SHOP DRAWING GROUPED BY TYPES OF EQUIPMENT, I.E., LIGHTING FIXTURES, PANELBOARDS, ETC.
5. SECTION FOR EACH SYSTEM, INCLUDING:
   a. BRIEF DESCRIPTION OF SYSTEM OPERATION WITH LOCATION OF MAJOR COMPONENTS.
   b. LIST OF ITEMS IN SYSTEM REQUIRING PERIODIC SERVICE. REQUIRES SEPARATE SECTION FOR EACH OF: ELECTRICAL DISTRIBUTION SYSTEM FROM THE SERVICE ENTRANCE TO EACH LIGHTING AND POWER PANEL AND OTHER SYSTEMS (I.E. CONTROL SYSTEMS AND ANY OTHER GENERAL CONTRACTOR SYSTEM LISTED IN THESE SPECIFICATIONS.)

AM. TENANT SHALL PROVIDE A COMPLETE 12-MONTH WARRANTY FOR PARTS ON EQUIPMENT PROVIDED BY TENANT AND TENANT'S VENDORS. THIS CONTRACTOR SHALL NOT BEAR ADDITIONAL WARRANTIES BEYOND A COMPLETE WORKING SYSTEM, AND AS SUCH, NO ADDITIONAL MONIES SHOULD BE INCLUDED IN THE BID.

AN. AT THE END OF THE PROJECT, CLEAN EQUIPMENT, INCLUDING LIGHT FIXTURES, TO THE SATISFACTION OF TENANT'S CONSTRUCTION MANAGER. REMOVE DUST, DIRT, DEBRIS, PAINT AND FOREIGN MATTER FROM EQUIPMENT.

26 05 19 LOW VOLTAGE ELECTRICAL POWER CONDUCTORS

A. CONDUCTORS SHALL BE COPPER - ALUMINUM CONDUCTORS ARE NOT PERMITTED UNLESS NOTED OTHERWISE ON THE DRAWINGS.

B. MINIMUM COPPER WIRE SIZES FOR WET AND DRY AREAS AS DEFINED BY THE N.E.C. SHALL BE AS FOLLOWS:

20 AMP CKT BKR OR FUSE = #12 AWG, THHN/THWN
30 AMP CKT BKR OR FUSE = #10 AWG, THHN/THWN
40 AMP CKT BKR OR FUSE = #8 AWG, THHN/THWN
50 AMP CKT BKR OR FUSE = #8 AWG, THHN/THWN
100 AMP CKT BKR OR FUSE = #3 AWG, THHN/THWN
125 AMP CKT BKR OR FUSE = #1 AWG, THHN/THWN
200 AMP CKT BKR OR FUSE = #3/0 AWG, THHN/THWN

ADJUST MINIMUM WIRE SIZES FOR 20A BRANCH CIRCUITS FOR DISTANCE, MEASURED FROM THE PANELBOARD CIRCUIT BREAKER TO THE FURTHEST OUTLET, AS FOLLOWS:

LESS THAN 70 FT - #12
BETWEEN 71 AND 110 FEET - #10
BETWEEN 111 AND 180 FEET - #8
OVER 180 FEET - #6

CONDUCTORS USED FOR EMERGENCY LIGHTING CIRCUITS SHALL BE #10 AWG, MINIMUM, AND SHALL BE RUN IN SEPARATE CONDUIT USED FOR NO OTHER PURPOSE.

CONDUCTORS MAY BE STRANDED FOR SIZES #10 AWG AND LARGER. CONDUCTORS SIZE #12 AND SMALLER SHALL BE SOLID (NOT STRANDED).

20 AMP BRANCH CIRCUIT CONDUCTORS LARGER THAN #10 AWG SHALL BE REDUCED TO #10 AWG WITHIN 10 FEET OF PANELBOARD AND DEVICES IN JUNCTION BOXES ON RATED TERMINAL STRIPS.

C. THE FOLLOWING COLOR CODE SHALL BE USED:

	208/120 VOLT	~~480/277 VOLT~~
PHASE A	BLACK	~~BROWN~~
PHASE B	RED	~~ORANGE~~
PHASE C	BLUE	~~YELLOW~~
NEUTRAL	WHITE	~~GRAY~~
GROUND	GREEN	~~GREEN~~

D. CIRCUIT BREAKER/FUSE AND WIRE SIZE COMBINATIONS NOT SHOWN ABOVE SHALL BE APPROVED BY THE ENGINEER PRIOR TO INSTALLATION.

26 05 26 GROUNDING AND BONDING

A. FURNISH AND INSTALL A COMPLETE GROUNDING SYSTEM IN COMPLIANCE WITH ALL REQUIREMENTS OF THE NATIONAL ELECTRICAL CODE.

B. PROVIDE A SEPARATE EQUIPMENT GROUNDING CONDUCTOR, MINIMUM SIZE PER NEC TABLE 250.122, IN EACH CONDUIT ALONG WITH FEEDERS, BRANCH CIRCUITS AND CONTROL CIRCUITS. CONDUCTOR INSULATION SHALL BE GREEN.

C. CONDUIT SYSTEM SHALL BE ELECTRICALLY CONTINUOUS. GROUND ENCLOSURES AND NON-CURRENT CARRYING METALS. LOCK NUTS SHALL CUT THROUGH ENAMELED OR PAINTED SURFACES ON ENCLOSURES. WHERE ENCLOSURES AND NON-CURRENT CARRYING METALS ARE ISOLATED FROM THE CONDUIT SYSTEM, USE BONDING JUMPERS WITH APPROVED CLAMPS.

D. BOND RECEPTACLES TO GROUND CONDUCTORS USING #12 AWG MINIMUM BONDING JUMPERS BETWEEN RECEPTACLE TERMINALS AND GROUND CONDUCTORS. METAL-TO-METAL CONTACT BETWEEN THE DEVICE YOKE AND THE OUTLET BOX IS NOT ACCEPTABLE FOR EITHER SURFACE-MOUNTED BOXES OR FLUSH-TYPE BOXES.

E. PROVIDE GROUNDING ELECTRODE CONDUCTORS FOR SEPARATELY-DERIVED SYSTEMS, SUCH AS DRY-TYPE TRANSFORMERS, IN NON-METALLIC (PVC) CONDUIT TO MINIMIZE GROUND IMPEDANCE.

F. GROUND LIGHTING FIXTURES BY THE USE OF A PIGTAIL FASTENED ON BARE METAL THAT IS FREE OF PAINT.

G. BOND STRUCTURAL STEEL TO EARTH, GROUND RODS OR PLATES, OR WATER SYSTEM.

H. BOND ROOF-MOUNTED EQUIPMENT TO ACCEPTABLE GROUNDS PER THE N.E.C.

26 05 29 DISTRIBUTION

A. EXISTING ELECTRICAL SERVICE FROM LANDLORD'S ELECTRICAL SERVICE ROOM. RE-TERMINATE ON REPLACED LOW VOLTAGE PANELBOARD. ~~FURNISH LABOR, MATERIALS AND EQUIPMENT NECESSARY TO INSTALL THE ELECTRICAL SERVICE FROM THE LANDLORD'S ELECTRICAL SERVICE ROOM INCLUDING (AS INDICATED ON SHEET E4.0) BUT NOT LIMITED TO THE SECONDARY CABLES, CONDUIT, PULL WIRE AND GROUND ROD AND SLEEVE AS REQUIRED. COORDINATE REQUIREMENTS WITH LANDLORD PRIOR TO BID. THE GENERAL CONTRACTOR SHALL COORDINATE INSTALLATION OF THE DISCONNECT SWITCHES AND PANELBOARD WITH THIS WORK.~~

B. ~~COORDINATE WORK PROVIDED BY LANDLORD PRIOR TO BID AND INCLUDE THE COST OF SUCH WORK AS DIRECTED BY LANDLORD. WIRING OF METERING EQUIPMENT SHALL BE BY GENERAL CONTRACTOR AS DIRECTED BY THE ELECTRIC COMPANY.~~

C. METERING EQUIPMENT IS EXISTING TO REMAIN. CONTRACTOR SHALL COORDINATE WITH MALL/UTILITY TO REASSIGN TO TENANT AND ENSURE METER IS INSTALLED TO THE MALLS/UTILITIES REQUIREMENTS.

D. DISCONNECT SWITCHES SHALL BE HEAVY-DUTY TYPE, UL LISTED.

E. DISCONNECT SWITCHES SHALL BE BY SQUARE D, SIEMENS, CUTLER HAMMER, OR GENERAL ELECTRIC.

F. SWITCHES SHALL HAVE SWITCH BLADES WHICH ARE FULLY VISIBLE IN THE "OFF" POSITION WHEN THE SWITCH DOOR IS OPEN. SWITCHES SHALL HAVE REMOVABLE ARC SUPPRESSORS WHERE NECESSARY TO PERMIT EASY ACCESS TO LINE SIDE LUGS. LUGS SHALL BE FRONT REMOVABLE AND UL LISTED FOR 75 DEGREES C., ALUMINUM OR COPPER WIRES.

G. SWITCHES SHALL BE QUICK-MAKE, QUICK-BREAK. THE OPERATING HANDLE SHALL BE AN INTEGRAL PART OF THE BOX, NOT THE COVER. PROVISIONS FOR PADLOCKING THE SWITCH IN THE "OFF" POSITION WITH AT LEAST THREE LOCKS SHALL BE PROVIDED. SWITCHES SHALL HAVE A DUAL COVER INTERLOCK TO PREVENT UNAUTHORIZED OPENING OF THE SWITCH DOOR WHEN THE HANDLE IS IN THE "ON" POSITION, AND TO PREVENT CLOSING OF THE SWITCH MECHANISM WITH THE DOOR OPEN. THE HANDLE POSITION SHALL INDICATE WHETHER THE SWITCH IS "ON" OR "OFF".

H. SWITCHES SHALL BE FURNISHED IN NEMA 1 GENERAL PURPOSE ENCLOSURE EXCEPT SWITCHES LOCATED OUTDOORS SHALL BE NEMA 3R WEATHERPROOF (WP). NEMA 3R ENCLOSURE SHALL BE MANUFACTURED FROM GALVANIZED STEEL. ENCLOSURES SHALL HAVE A GRAY BAKED ENAMEL FINISH, ELECTRODEPOSITED, ON CLEANED, PHOSPHATIZED STEEL.

I. SWITCHES SHALL BE RATED FOR AC. FUSIBLE SWITCHES MUST ACCEPT CLASS R FUSES AND HAVE PROVISIONS TO REJECT FUSES EXCEPT CLASS R. THE UL LISTED SHORT CIRCUIT RATING OF THE SWITCHES SHALL BE 200,000 RMS SYMMETRICAL AMPERES WHEN CLASS R FUSES ARE USED.

J. NAMEPLATES SHALL INDICATE FUNCTION OF EACH DEVICE. NAMEPLATES SHALL BE LAMINATED PHENOLIC WITH A WHITE SURFACE AND BLACK CORE. USE 1/16" THICK MATERIAL FOR NAMEPLATES UP TO 2"x4" AND USE 1/8" THICK MATERIAL FOR LARGER SIZES. ALL NAMEPLATES SHALL BE FURNISHED AND INSTALLED BY GENERAL CONTRACTOR. GENERAL CONTRACTOR TO COORDINATE WITH THE LOCAL BUILDING AUTHORITY OR BUILDING INSPECTOR ON WHICH ITEMS SHOULD HAVE A NAMEPLATE.

K. FUSES SHALL BE BUSSMANN, SIZES AS NOTED ON DRAWINGS.

L. FUSES SHALL BE UL LISTED, CURRENT-LIMITING TYPE, MINIMUM 200,000 AMPS INTERRUPTING CAPACITY.

M. FUSES 1 AMP AND ABOVE SHALL BE BUSSMANN "LOW PEAK" RK-1. 250 VOLT FUSES SHALL BE USED ON 208/120 VOLT SYSTEMS.

N. CONTROL FUSES FOR MOTOR STARTERS, CONTACTORS, AND CONTROL PANEL TRANSFORMERS SHALL BE BUSSMANN FNQ-R SIZED AT 500% RATED CURRENT.

O. FURNISH SPARE FUSES TO THE TENANT IN THE FOLLOWING QUANTITIES: 10% OF TOTAL PROJECT QUANTITY (BUT NOT LESS THAN THREE (3) FOR EACH TYPE AND RATING OF FUSES).

P. PROVIDE A TYPED LIST OF SPARES FUSES.

Q. CIRCUIT BREAKERS SHALL BE QUICK-MAKE, QUICK-BREAK, THERMAL-MAGNETIC-TRIP (ENCLOSURE COMPENSATED), MOLDED CASE TYPE, UL LISTED. 15 AND 20 AMP SINGLE-POLE BREAKERS SHALL CARRY THE UL "SWD" MARKING. LINE SIDE TERMINALS SHALL BE BOLTED TO MAIN BUSBARS. BREAKER RATINGS SHALL BE PER DRAWINGS.

R. FURNISH AND INSTALL CIRCUIT BREAKER TYPE POWER, HEATING AND LIGHTING PANELBOARDS AS SHOWN ON THE DRAWINGS.

S. PANELBOARDS SHALL BE LISTED UNDER UL 67 AND SHALL HAVE APPROPRIATE LABELING. BUSSING SHALL BE SOLID COPPER.

T. ~~PANELBOARDS FOR USE ON 480Y/277V SYSTEM SHALL HAVE A MINIMUM INTEGRATED EQUIPMENT SHORT CIRCUIT CURRENT RATING OF 18,000 AMPS RMS SYMMETRICAL~~. PANELBOARDS FOR USE ON 208Y/120V VOLT SYSTEM SHALL HAVE A MINIMUM INTEGRATED EQUIPMENT SHORT CIRCUIT CURRENT RATING OF 10,000 AMPS RMS SYMMETRICAL. EXACT RATING SHALL BE DETERMINED BY AVAILABLE FAULT CURRENT FROM UTILITY. GENERAL CONTRACTOR SHALL FURNISH PANELS BASED ON UTILITY COMPANY INFORMATION.

U. PANELBOARD FRONT ASSEMBLY SHALL INCLUDE A HINGED DOOR WITH A FLUSH MOUNTED CYLINDER LOCK TYPE SPRING LOADED LATCH. LOCKS SHALL BE KEYED ALIKE. DOOR SHALL INCLUDE A TYPED CIRCUIT DIRECTORY CARD MOUNTED IN A FRAME WITH A CLEAR PLASTIC PROTECTIVE COVER.

V. EACH PANELBOARD SHALL HAVE A FULL CAPACITY SOLID COPPER NEUTRAL SUBASSEMBLY.

W. EACH PANELBOARD SHALL INCLUDE A SOLID COPPER GROUND BUS SUBASSEMBLY, SIMILAR IN CONSTRUCTION TO THE NEUTRAL SUBASSEMBLY, FACTORY-MOUNTED AND BONDED TO THE BOX.

X. ~~EACH PANELBOARD SHALL INCLUDE (WHERE SPECIFIED) A SOLID COPPER ISOLATED GROUND BUS SUBASSEMBLY, SIMILAR IN CONSTRUCTION TO THE NEUTRAL SUBASSEMBLY, FACTORY-SUPPLIED FIELD-INSTALLED.~~

Y. INTERIOR LABELING SHALL INCLUDE A CONNECTION DIAGRAM AND LABELS INDICATING PROPER TORQUE AND WIRE TYPES FOR MAIN INPUT CONNECTIONS AND BOTH LINE AND LOAD SIDE CIRCUIT BREAKER CONNECTIONS.

Z. TERMINALS FOR CONNECTION OF THE FEEDER TO THE PANELBOARD MAINS OR MAIN BREAKER SHALL BE UL RECOGNIZED AS SUITABLE FOR THE TYPE OF CONDUCTORS SPECIFIED.

AA. MANUFACTURER: SQUARE-D COMPANY TYPE 'NQ' FOR 208Y/120V APPLICATIONS. ~~SQUARE-D COMPANY TYPE 'NF' FOR 480Y/277V APPLICATIONS~~. EQUAL EQUIPMENT BY GENERAL ELECTRIC, SIEMENS, OR CUTLER HAMMER WILL BE ACCEPTED.

AB. INSTALL EACH PANELBOARD WITH TOP CIRCUIT BREAKER AT 6'-0" ABOVE FLOOR, FLUSH- OR SURFACE-MOUNTED AS INDICATED ON THE DRAWINGS.

AC. NAMEPLATES AS SCHEDULED ON DRAWINGS SHALL INDICATE FUNCTION OF EACH DEVICE. NAMEPLATES SHALL BE LAMINATED PHENOLIC WITH A WHITE SURFACE AND BLACK CORE. USE 1/16" THICK MATERIAL FOR PLATES UP TO 2" X 4". FOR LARGER SIZES, USE 1/8" THICK MATERIAL.

AD. CONNECTIONS AT PANELS AND SWITCHES ARE TO BE MADE, SPLICES COMPLETE, FUSES IN PLACE, CIRCUITS CONTINUOUS FROM POINT OF SERVICE CONNECTION TO FINAL DESTINATIONS, COVERS AND PLATES INSTALLED, AND FINAL ELECTRICAL INSPECTION COMPLETED PRIOR TO THE TIME OF FINAL INSPECTION BY TENANT'S CONSTRUCTION MANAGER.

AE. TEST AND MAKE CORRECTIONS/ADJUSTMENTS FOR PHASE BALANCING.

26 05 33 RACEWAY AND BOXES FOR ELECTRICAL SYSTEMS

A. FURNISH AND INSTALL OUTLET BOXES FOR DEVICES AS REQUIRED, (RECEPTACLES, LIGHTING FIXTURES, MOTORS, SYSTEMS EQUIPMENT CONNECTIONS, SPECIAL OUTLETS AND AS OTHERWISE REQUIRED).

B. OUTLET BOXES SHALL BE GALVANIZED PRESSED STEEL OF THE STANDARD KNOCKOUT TYPE. NO ROUND OUTLET BOXES SHALL BE PERMITTED, EXCEPT AS SPECIFICALLY NOTED ON DRAWINGS. CONCEALED BOXES SHALL NOT BE LESS THAN 4" SQUARE AND 1-1/2" DEEP, WITH PLASTER RINGS.

C. OUTLET BOXES UPON WHICH LIGHTING FIXTURES ARE TO BE INSTALLED SHALL BE EQUIPPED WITH 3/8" FIXTURE STUDS.

D. RECESSED OUTLET BOXES SHALL BE STAMPED STEEL SUITABLE FOR THE DEVICE INSTALLED. SURFACE MOUNTED OUTLET BOXES SHALL BE CAST IRON SUITABLE FOR THE DEVICE INSTALLED.

E. EXTERIOR BOXES SHALL BE CAST RUST-RESISTING METAL WITH GASKETED COVERS.

F. INSTALL BOXES RIGIDLY FROM BUILDING STRUCTURE AND SUPPORT INDEPENDENTLY OF THE CONDUIT SYSTEM. ALSO PROVIDE SUITABLE BOX EXTENSIONS TO EXTEND BOXES TO FINISHED FACES OF FLOORS, CEILINGS, WALLS ETC. PROVIDE OUTLET BOXES WITH CADDY "QUICK-MOUNT BOX SUPPORT" TO MINIMIZE THE DEFLECTION THAT OCCURS WHEN PLUGGING/UNPLUGGING INTO THESE DEVICES.

G. ENCLOSE ELECTRICAL CONDUCTORS IN CONTINUOUS GROUNDED RACEWAY SYSTEM EXCEPT AS OTHERWISE NOTED (I.E. LOW-VOLTAGE PLENUM-RATED WIRE).

H. ~~NO OTHER CIRCUITS ARE TO BE RUN IN SAME CONDUIT FEEDING ISOLATED GROUND RECEPTACLES.~~

I. RACEWAY AND ENCLOSURE SIZES SHALL BE AS SHOWN ON DRAWINGS OR, IF NOT SHOWN, SHALL BE SIZED TO COMPLY WITH N.E.C. FILL REQUIREMENTS FOR CONDUCTORS ENCLOSED.

J. PROVIDE PULL OR JUNCTION BOXES IN RACEWAY SYSTEMS AT MAXIMUM OF 100 FOOT INTERVALS AND WHERE REQUIRED TO AVOID EXCESSIVE NUMBER OF BENDS, TO FACILITATE WIRE PULLING OR TO PROVIDE ACCESS TO RACEWAY SYSTEM. BOXES AND COVERS SHALL BE GALVANIZED STEEL OF CODE GAUGE SIZE. TO THE EXTENT POSSIBLE, AVOID THE USE OF JUNCTION BOXES IN INACCESSIBLE LOCATIONS. THE USE OF JUNCTION BOXES ABOVE DRYWALL CEILINGS SHALL BE LIMITED TO LOCATIONS NEAR ACCESS FRAMES USED FOR DIFFUSERS AND RETURN AIR GRILLES OR ACCESS PANELS AS LOCATED ON PLANS. JUNCTION AND PULL BOXES MUST BE LABELED WITH CIRCUIT NUMBER IDENTIFICATION AND SYSTEM TYPE ON COVER.

K. RACEWAYS AND ENCLOSURES SHALL BE ADEQUATELY SUPPORTED FROM BUILDING STRUCTURE WITH APPROVED SUPPORT RODS AND/OR CLAMPS.

L. CONDUIT SHALL BE RIGID HEAVYWALL GALVANIZED STEEL OR THIN WALL EMT WHERE PERMITTED BY CODE OR AS HEREINAFTER SPECIFIED. PVC SCHEDULE 80 CONDUIT MAY BE USED UNDER FLOOR SLAB. ROMEX, BX OR AC, ETC., ARE NOT PERMITTED.

M. MINIMUM SIZE OF CONDUIT SHALL BE 1/2" FOR INDIVIDUAL LIGHTING FIXTURE CONNECTIONS OR TO INDIVIDUAL LIGHT SWITCHES (IF ACCEPTABLE BY THE LANDLORD AND LOCAL CODE OFFICIALS) AND 3/4" FOR OTHER LOCATIONS. IF HVAC CONTROL WIRING IS REQUIRED TO BE RUN IN CONDUIT, IT SHALL BE A MINIMUM OF 1/2", UNLESS NOTED OTHERWISE ON DRAWINGS. IN/UNDER FLOOR CONDUIT SHALL BE OF MINIMUM 1" SIZE.

N. EMT THIN WALL CONDUIT MAY BE USED INSIDE HOLLOW PARTITIONS, AND ABOVE SUSPENDED CEILINGS AND EXPOSED ABOVE 8'-0" ABOVE FINISHED FLOOR OR ABOVE PANELBOARDS. EMT CONDUIT MAY NOT BE USED BURIED IN EARTH OR FILL, IN OR UNDER CONCRETE FLOOR OR IN POURED CONCRETE CONSTRUCTION.

O. PVC CONDUIT USED UNDER FLOOR SLABS SHALL HAVE RIGID GALVANIZED STEEL ELLS AND METALLIC CONDUIT ABOVE FLOOR SLAB.

P. FLEXIBLE METAL CONDUIT (FMC) SHALL BE USED ONLY FOR ABOVE CEILING APPLICATIONS, CONNECTIONS INSIDE CASEWORK, AS THE FINAL CONNECTION TO RECESSED FIXTURES, MOTORS, AND ELECTRICAL EQUIPMENT THAT MAY GENERATE VIBRATION THROUGH THE CONDUIT SYSTEM. EMT SHALL BE USED FOR ALL CONNECTIONS TO PANELBOARDS AND RUN TO WIREWAY ABOVE CEILING WHERE FMC MAY BE USED. FMC ABOVE CEILING SHALL BE CLIPPED TO CEILING FRAMING OR SUPPORT WIRING AND RAN TO A TROUGH AND RAN TO PANEL IN EMT. FMC SHALL BE UL APPROVED, AND BOTH THE CONDUIT AND FITTINGS SHALL BE LISTED FOR GROUNDING. FMC SHALL BE MINIMUM ONE-HALF INCH (1/2") ELECTRICAL TRADE SIZE. WHEN CONNECTED TO HARD CONDUIT, THE FMC MUST BE THE SAME SIZE AS THE HARD CONDUIT IT IS CONNECTED TO. AN EQUIPMENT GROUNDING CONDUCTOR MUST BE INSTALLED IN ALL RUNS OF FMC.

Q. LIQUID-TIGHT FLEXIBLE METAL CONDUIT (LFMC) AND LIQUID-TIGHT FITTINGS SHALL BE USED IN AREAS EXPOSED TO THE WEATHER OR EXCESSIVE MOISTURE AS THE FINAL CONNECTION TO MOTORS, AND ELECTRICAL EQUIPMENT THAT MAY GENERATE VIBRATION THROUGH THE CONDUIT SYSTEM. LFMC SHALL BE UL APPROVED, AND BOTH THE CONDUIT AND FITTINGS SHALL BE LISTED FOR GROUNDING. LFMC SHALL BE KEPT TO SIX FEET (6'-0") MAXIMUM LENGTH AND SHALL BE MINIMUM ONE-HALF INCH (1/2") ELECTRICAL TRADE SIZE. WHEN CONNECTED TO HARD CONDUIT, THE LFMC MUST BE THE SAME SIZE AS THE HARD CONDUIT IT IS CONNECTED TO. PROVIDE AN EQUIPMENT GROUNDING CONDUCTOR IN RUNS OF LFMC.

R. CONDUIT SHALL GENERALLY BE CONCEALED WHERE POSSIBLE. NO CONDUIT SHALL BE RUN IN SLAB, EXCEPT AS REQUIRED FOR FLOOR-MOUNTED DEVICES. PROVIDE PROPERLY LABELED PULL STRING IN EMPTY CONDUITS.

S. EXPOSED CONDUIT PERMITTED IN ELECTRIC ROOMS, AND SIMILAR UNFINISHED SPACES, OVERHEAD IN AREAS WITHOUT CEILINGS AND ELSEWHERE AT THE DISCRETION OF THE ARCHITECT.

T. CONDUIT FITTINGS SHALL BE GALVANIZED MALLEABLE IRON OR STEEL. CONNECTORS AND COUPLINGS SHALL BE THREADED OR CUPPED SET SCREW TYPE, CONCRETE TIGHT. CONDUIT BODIES SHALL BE MALLEABLE IRON, THREADED FOR HEAVYWALL CONDUIT AND CUPPED SET SCREW TYPE FOR EMT, WITH CADMIUM FINISH AND CADMIUM PLATED SHEET STEEL COVERS. SYNTHETIC RUBBER GASKETS SHALL BE USED UNDER BODY COVERS EXPOSED TO WEATHER. EMT CONNECTORS SHALL BE INSULATED THROAT TYPE.

U. INSTALL EXPANSION FITTINGS AT LOCATIONS WHERE CONDUITS CROSS BUILDING EXPANSION JOINTS OR TRAVERSE FROM ONE INDEPENDENT STRUCTURE TO ANOTHER. INSTALL WHEREVER CONDUITS TRAVERSE STRUCTURES HAVING SEPARATE FOUNDATIONS OR WHERE EXISTING BUILDINGS ARE JOINED TO A NEW STRUCTURE.

V. DURING ROUGHING-IN, CAP CONDUITS WHICH MAY BECOME FOULED WITH FOREIGN MATERIAL.

W. NO MORE THAN THREE (3) 90 DEGREE BENDS WILL BE ALLOWED IN ANY ONE CONDUIT RUN. WHERE MORE BENDS ARE NECESSARY IN ANY SINGLE RUN, A PULL BOX SHALL BE INSTALLED. ALL CONDUIT EXCEPT IN CONCRETE SLAB OR EARTH SHALL BE ROUTED PARALLEL OR PERPENDICULAR TO THE LINES OF THE BUILDING, AND NO OUT-OF-PLUMB OR DIAGONAL LINES WILL BE ACCEPTED

26 09 23 LIGHTING CONTROLS

A. WHERE LIGHTING CONTACTORS ARE INDICATED ON THE DRAWINGS, THEY WILL BE FURNISHED AND INSTALLED BY THE GENERAL CONTRACTOR COMPLETE WITH CONDUIT. THE GENERAL CONTRACTOR WILL BE RESPONSIBLE TO INSTALL THE CONTACTORS AND PULL WIRES AS DETAILED ON THESE DRAWINGS AND CIRCUITED EXACTLY AS DIAGRAMMED ON THE ELECTRICAL DETAIL DRAWINGS. NO VARIATIONS TO THE CIRCUITING ARE ALLOWED.

~~26 22 00 LOW VOLTAGE TRANSFORMERS~~

A. ~~EXISTING ENERGY-EFFICIENT LOW-VOLTAGE DRY-TYPE DISTRIBUTION TRANSFORMER TO BE RELOCATED. AS SPECIFIED HEREIN AND AS SHOWN ON THE PLANS. TRANSFORMERS SHALL BE LOW-LOSS-TYPE WITH MINIMUM EFFICIENCIES PER ENERGY POLICY AND CONSERVATION ACT REGULATIONS (DOE 2016)~~

B. ~~TRANSFORMER KVA CAPACITIES SHALL BE AS INDICATED ON DRAWINGS.~~
~~PRIMARY VOLTAGE: 480V, 3-PHASE DELTA, UNLESS NOTED OTHERWISE ON THE DRAWINGS.~~
~~SECONDARY VOLTAGE: 208Y/120V, 3-PHASE, 4-WIRE, UNLESS NOTED OTHERWISE ON THE DRAWINGS.~~

C. ~~TRANSFORMER SHALL BE UL LISTED AND MANUFACTURED IN ACCORDANCE WITH NEMA STANDARD ST-20.~~

D. ~~TRANSFORMER SHALL HAVE SIX (6) FULL CAPACITY PRIMARY TAPS AT 2-1/2% INCREMENTS, TWO (2) ABOVE NOMINAL RATED VOLTAGE AND FOUR (4) BELOW NOMINAL.~~

E. ~~SOUND LEVELS SHALL NOT EXCEED 45 DB FOR TRANSFORMERS RATED UP TO 50 KVA, 50 DB FOR TRANSFORMERS RATED 51 TO 150 KVA, AND 55 DB FOR TRANSFORMERS RATED ABOVE 150 KVA; MEASURED PER NEMA STANDARDS.~~

F. ~~TRANSFORMER SHALL BE 150 DEGREE C TEMPERATURE RISE ABOVE 40 DEGREE C AMBIENT. INSULATING MATERIALS SHALL BE IN ACCORDANCE WITH STANDARDS FOR A 220 DEGREE C UL COMPONENT RECOGNIZED INSULATION SYSTEM. THE MAXIMUM TEMPERATURE OF THE TOP OF THE ENCLOSURE SHALL NOT EXCEED 150 DEGREE C. RISE ABOVE A 40 DEGREE C. AMBIENT.~~

G. ~~TRANSFORMER COILS SHALL BE OF CONTINUOUS-WOUND COPPER CONSTRUCTION AND SHALL BE IMPREGNATED WITH NON-HYDROSCOPIC, THERMOSETTING VARNISH.~~

H. ~~TRANSFORMER CORES SHALL BE CONSTRUCTED OF HIGH GRADE, NON-AGING, GRAIN-ORIENTED SILICON STEEL. MAGNETIC FLUX DENSITIES ARE TO BE KEPT WITHIN LINEAR OPERATING RANGE. THE CORE LAMINATIONS SHALL BE CLAMPED TOGETHER WITH STRUCTURAL STEEL ANGLES. THE COMPLETED CORE AND COIL SHALL THEN BE BOLTED TO THE BASE OF THE ENCLOSURE BUT ISOLATED FROM THE ENCLOSURE BY MEANS OF RUBBER, VIBRATION-ABSORBING MOUNTS. THERE SHALL BE NO METAL-TO-METAL CONTACT BETWEEN THE CORE AND COIL AND THE ENCLOSURE. ON TRANSFORMERS 500 KVA AND SMALLER, THE VIBRATION ISOLATING SYSTEM SHALL BE DESIGNED TO PROVIDE A PERMANENT FASTENING OF THE CORE AND COIL TO THE ENCLOSURE. SOUND ISOLATING SYSTEMS REQUIRING THE COMPLETE REMOVAL OF FASTENING DEVICES WILL NOT BE ACCEPTABLE.~~

I. ~~ENCLOSE TRANSFORMER IN HEAVY GAUGE, SHEET STEEL, VENTILATED ENCLOSURE WITH VENTILATING OPENINGS DESIGNED TO PREVENT ACCIDENTAL ACCESS TO LIVE PARTS IN ACCORDANCE WITH UL, NEMA, AND NATIONAL ELECTRICAL CODE STANDARDS FOR VENTILATED ENCLOSURES.~~

J. ~~TRANSFORMER ENCLOSURE SHALL BE DEGREASED, CLEANED PHOSPHATIZED, PRIMED, AND FINISHED WITH A GRAY, BAKED ENAMEL.~~

K. ~~TRANSFORMER CORES SHALL BE VISIBLY GROUNDED TO THE ENCLOSURE BY MEANS OF A FLEXIBLE GROUNDING CONDUCTOR SIZED IN ACCORDANCE WITH APPLICABLE NEMA, IEEE, AND ANSI STANDARDS.~~

L. ~~LOW-VOLTAGE DRY-TYPE TRANSFORMER SHALL BE GENERAL ELECTRIC. EQUAL PRODUCT BY SQUARE D, CUTLER HAMMER OR SIEMENS MAY BE FURNISHED AT THE CONTRACTOR'S OPTION.~~

M. ~~FURNISH AND INSTALL ADEQUATE QUANTITY OF LUGS TO TERMINATE THE QUANTITY AND SIZE OF CONDUCTORS AS SHOWN ON THE DRAWINGS, SUITABLE FOR TYPE OF CONDUCTORS SPECIFIED ELSEWHERE IN THESE SPECIFICATIONS. LUGS SHALL BE RATED FOR 75 DEGREE C.~~

N. ~~A TRANSFORMER WHICH IS NOT FLOOR MOUNTED SHALL BE SECURELY MOUNTED FROM THE BUILDING STRUCTURE, REINFORCED WALLS, OR AS NOTED ON DRAWINGS. PROVIDE VIBRATION ISOLATORS AT MOUNTING POINTS TO REDUCE VIBRATION NOISES. PROVIDE FLEXIBLE METALLIC CONDUIT WITH GROUNDING BUSHING FOR PRIMARY AND SECONDARY CONNECTIONS TO TRANSFORMER. TRANSFORMERS SHALL BE LOCATED, SET, MOUNTED AND CONNECTED IN SUCH A MANNER AS TO KEEP NOISE LEVELS WITHIN THE SURROUNDING AMBIENT NOISE LEVELS AND MAINTAIN CODE REQUIRED CLEARANCES.~~

O. ~~ADJUST TAPS IN TRANSFORMER TO PROVIDE A SECONDARY VOLTAGE OF 120 MINIMUM TO 125 VOLTS MAXIMUM ONCE THE FINAL CONNECTIONS HAVE BEEN MADE TO THE LOW VOLTAGE PANELBOARD. PROVIDE FINAL VOLTAGE REPORT TO TENANT'S CONSTRUCTION MANAGER AT TIME OF PUNCH-OUT.~~

26 27 26 WIRING DEVICES

A. INSTALL WIRING DEVICES, INCLUDING SWITCHES, RECEPTACLES AND POWER RECEPTACLES, TELEPHONE OUTLET BOXES, COVER PLATES AND BLANK OUTLET PLATES AS SHOWN OR DESCRIBED ON DRAWINGS.

B. UNLESS OTHERWISE NOTED ON DRAWINGS OR OTHERWISE REQUIRED BY THE NATIONAL ELECTRICAL CODE, ACCESSIBILITY CODES OR LOCAL CODES, OUTLET HEIGHTS SHALL BE AS FOLLOWS:

1. SWITCH HEIGHT 48" FROM FINISHED FLOOR TO CENTERLINE OF OUTLET.
2. CONVENIENCE OUTLETS:
   a. SALES: 16" FROM FINISHED FLOOR TO BOTTOM OF OUTLET.
   b. NON-SALES: 16" FROM FINISHED FLOOR TO BOTTOM OF OUTLET
3. TELEPHONE OUTLETS SHALL BE LOCATED AS NOTED ON DRAWINGS.

C. DUPLEX RECEPTACLES SHALL BE A MINIMUM OF 20 AMPERE RATING.

D. COLOR OF DEVICES AND PLATES SHALL BE WHITE UNLESS NOTED OTHERWISE. THE DEVICES SHALL BE OF THE TYPES AND RATINGS LISTED, OR EQUALS BY ARROW-HART, GENERAL ELECTRIC OR PASS AND SEYMOUR. WEATHERPROOF GFCI RECEPTACLES SHALL BE INSTALLED WHERE SHOWN ON DRAWINGS OR AS REQUIRED BY CODE. DEVICES SHALL BE OF THE FOLLOWING SPECIFICATIONS, UNLESS OTHERWISE INDICATED SPECIFICALLY ON PLANS.

SINGLE POLE SWITCHES: 20AMP - 120-277V: HUBBELL "HBL1221PL"
DOUBLE POLE SWITCHES: 20AMP - 120-277V: HUBBELL "HBL1222PL"
DUPLEX RECEPTACLES: 20AMP - 125V: HUBBELL "HBL5362"
~~DUPLEX RECEPTACLES - BLACK: 20AMP - 125V: HUBBELL "HBL5362BLK"~~
~~ISOLATED GROUND RECEPTACLES: 20AMP - 125V: HUBBELL "IG5362"~~
GFCI RECEPTACLES: 20AMP - 125V: HUBBELL "GF5362A"
FLOOR BOXES: HUBBELL "B-2527/29 WITH S-3925 BRASS COVER"
DEVICE COVER PLATES SHALL BE PASS AND SEYMOUR SERIES "RP" OR EQUAL BY EAGLE ELECTRIC MFG. CO.

E. OTHER EQUIVALENT DEVICES WITH MATCHING COVER PLATES MAY BE FURNISHED AS APPROVED BY TENANT.

F. WIRING DEVICES, UNLESS OTHERWISE PROPERLY AUTHORIZED, SHALL BE SAME MANUFACTURERS ONLY; NO ADDITIONAL MANUFACTURERS SHALL BE PERMITTED UNLESS SPECIFICALLY AUTHORIZED BY TENANT OR TENANT'S REPRESENTATIVE.

G. LOW VOLTAGE CONTROL DEVICES SHALL BE AS NOTED ON DRAWINGS OR AS REQUIRED.

~~26 29 13 MOTOR CONTROLLERS~~

A. ~~FURNISH AND INSTALL MOTOR CONTROLS, INCLUDING STARTERS, SAFETY DEVICES AND REMOTE CONTROL STATIONS, UNLESS FURNISHED BY EQUIPMENT MANUFACTURER IN PRE-WIRED ASSEMBLIES.~~

B. ~~FURNISH AND INSTALL MANUAL MOTOR STARTERS WITH OVERLOAD RELAYS IN EACH LINE CONDUCTOR FOR FRACTIONAL HORSEPOWER MOTORS NOT EQUIPPED WITH BUILT-IN RUNNING OVERCURRENT PROTECTION, NOT REQUIRING AUTOMATIC CONTROLLERS.~~

C. ~~MANUAL MOTOR STARTERS SHALL INCLUDE OVERLOAD RELAYS IN EACH LINE POLE, SIZED TO TRIP SWITCH AT 125% OF MOTOR FULL LOAD RUNNING CURRENT, NEON PILOT LIGHTS, AND NEMA ENCLOSURES, AS MANUFACTURED BY GENERAL ELECTRIC, ALLEN BRADLEY, CUTLER HAMMER, SIEMENS, OR SQUARE-D.~~

D. ~~FURNISH AND INSTALL AUTOMATIC MOTOR STARTERS FOR ONE (1) HP OR LARGER SINGLE PHASE AND THREE PHASE MOTORS OR MOTORIZED EQUIPMENT FURNISHED WITHOUT STARTERS, REQUIRING AUTOMATIC STARTERS FOR CONTROL REGARDLESS OF HORSEPOWER RATING. THREE PHASE STARTERS SHALL HAVE ANTI-SINGLE PHASING, UNDERVOLTAGE PROTECTION, AND PHASE REVERSAL PROTECTION RELAYS EITHER INCLUDED IN STARTERS OR WIRED TO STARTER CONTROL CIRCUIT.~~

E. ~~PROTECTIVE RELAYS SHALL HAVE ADJUSTABLE TIME-DELAY RELAY IN CIRCUIT TO AVOID NUISANCE SHUT DOWNS. TIME MARK OR SIMILAR EQUIPMENT IS ACCEPTABLE, IF PROTECTION IS NOT PART OF STARTER. DO NOT RELY ON PROPERLY-SIZED FUSES AND MOTOR STARTER OVERLOAD HEATERS ALONE TO AVOID SINGLE-PHASING BURNOUTS.~~

F. ~~FURNISH AND INSTALL CONTACTORS, CONTROL RELAYS, PUSHBUTTON STATIONS, SELECTOR SWITCHES, PILOT LIGHTS, FUSES AND SIMILAR CONTROL AUXILIARIES AS SHOWN ON DRAWINGS AND/OR REQUIRED TO PROVIDE PROPER CONTROL AND ISOLATION BETWEEN VARIOUS AUTOMATIC CONTROLLERS AND EQUIPMENT SHOWN ON THE DRAWINGS.~~

G. ~~CIRCUIT BREAKERS FEEDING MOTOR LOADS SHALL BE HACR TYPE.~~

H. ~~EQUIPMENT SHALL BE SAME MAKE AS MOTOR STARTERS. PUSHBUTTON STATIONS, SELECTOR SWITCHES, PILOT LIGHTS: HEAVY DUTY, OIL TIGHT, STANDARD SIZE, WITH TRANSFORMER TYPE PILOT LIGHTS, FLUSH MOUNTED WHERE PRACTICAL.~~

I. ~~OVERLOAD DEVICES, INCLUDING EQUIPMENT FURNISHED UNDER OTHER CONTRACTS, SHALL BE SET AND ADJUSTED TO SUIT THE LOAD CONDITIONS.~~

26 51 00 INTERIOR LIGHTING

A. INSTALL LIGHTING FIXTURES AS SHOWN ON THE DRAWINGS.

B. LIGHTING FIXTURES SHALL BE LISTED AND LABELED BY UNDERWRITERS LABORATORIES AND BALLASTS SHALL BE CBM CERTIFIED BY ETL.

C. LAMPS SHALL BE MANUFACTURED BY PHILIPS, OSRAM/SYLVANIA OR GENERAL ELECTRIC. LAMP TYPES SHALL BE BY THE SAME MANUFACTURER.

D. PROVIDE LIGHTING FIXTURES COMPLETE WITH BALLASTS, SOCKETS, LAMPS, END AND TRIM PLATES AND MOUNTING ACCESSORIES REQUIRED FOR A COMPLETE FIXTURE INSTALLATION.

E. FURNISH INCANDESCENT AND HIGH INTENSITY DISCHARGE RECESSED LIGHTING FIXTURES WITH THERMAL CUT OUTS AS REQUIRED BY THE NEC.

F. USE RAPID-START HIGH-POWER-FACTOR ELECTRONIC BALLASTS AND T8 LAMPS, UNLESS NOTED OTHERWISE. FURNISH SPECIAL LOW TEMPERATURE BALLASTS FOR EXTERIOR MOUNTED FIXTURES.

G. UNLESS OTHERWISE NOTED, LENSES ON FLUORESCENT FIXTURES ARE TO BE ACRYLIC AND A MINIMUM OF 0.125 IN. THICK.

H. RECESSED HID FIXTURES SHALL CARRY A ULR LISTING. THEY SHALL HAVE A THERMAL CUT OUT ON BOTH THE BALLAST AND THE FIXTURE ITSELF.

I. USE STEEL WIRE HANGERS FASTENED TO THE BUILDING STRUCTURE TO SUPPORT RECESSED FIXTURES AT EACH CORNER. (FOUR CORNER SUSPENDED). FIXTURES TO FIT TIGHT AGAINST CONSTRUCTION TO ELIMINATE LIGHT LEAKS.

J. WALL-MOUNTED FIXTURES SHALL BE MOUNTED PLUMB WITH BUILDING LINES AND INSTALLED WITH PROPER BOX AND COVER HARDWARE.

K. SURFACE-MOUNTED FIXTURES SHALL COVER MOUNTING HARDWARE. USE A CANOPY THAT IS NO LONGER THAN THE LENGTH AND WIDTH OF THE FIXTURE AND AT A HEIGHT THAT IS NO HIGHER THAN REQUIRED TO MOUNT FIXTURE ABSOLUTELY VERTICAL. CANOPY FINISH SHALL MATCH FIXTURE FINISH.

L. STEM-MOUNTED FIXTURES SHALL BE MOUNTED SO AS TO BE ABSOLUTELY VERTICAL AND HORIZONTAL. INSTALL AND SUPPORT AS SHOWN ON DRAWINGS.

27 00 00 GENERAL REQUIREMENTS

A. PROVIDE MATERIALS, LABOR, TOOLS, TRANSPORTATION INCIDENTALS AND APPURTENANCES TO COMPLETE IN EVERY DETAIL AND LEAVE IN WORKING ORDER WORK CALLED FOR HEREIN AND AS INDICATED ON THE DRAWINGS.

B. MATERIAL AND EQUIPMENT SHALL MEET THE REQUIREMENTS OF THE FOLLOWING STANDARDS:

1. TELECOMMUNICATIONS INDUSTRY ASSOC./ELECTRONIC INDUSTRIES ALLIANCE (TIA/EIA):
   a. TIA/EIA 568A.1, 2, AND 3 TELECOMMUNICATION CABLING STANDARD.
   b. TIA/EIA 569 TELECOMMUNICATION PATHWAYS AND SPACES.
   c. TIA/EIA 606 ADMINISTRATION OF INFRASTRUCTURE
   d. TIA/EIA 607 GROUNDING AND BONDING
   e. COMPLY WITH TIA/EIA 568, 569, AND BIC STANDARDS.
   f. COMPLY WITH NFPA 70.

C. FURNISH NEW AND UN-DETERIORATED MATERIALS OF A QUALITY NOT LESS THAN SPECIFIED HEREIN. NEW MATERIAL SHALL HAVE MANUFACTURER'S NAME, MODEL NUMBER, OR OTHER IDENTIFICATION MARKING.

D. THE CONTRACTOR SHALL BEAR THE COSTS OF PERMITS, INSPECTIONS TESTS, AND APPROVALS.

E. PROVIDE ON-SITE PERSONNEL TO TROUBLESHOOT AND REPAIR ANY PROBLEMS THAT ARISE DURING CUTOVER AS THEY RELATE TO THEIR INSTALLED SYSTEM.

F. UPON COMPLETION OF THE WORK, FURNISH A WARRANTY FOR COMPONENTS, PARTS, AND ASSEMBLIES AGAINST DEFECTS IN MATERIALS AND WORKMANSHIP. WARRANTY SERVICES SHALL BE PROVIDED BY A CERTIFIED, FACTORY TRAINED REPRESENTATIVE OF THE EQUIPMENT MANUFACTURER FOR A MINIMUM OF ONE YEAR OR AS SPECIFIED IN EACH INDIVIDUAL SECTION.

27 05 10 TELEPHONE AND DATA CONDUIT SYSTEM

A. FURNISH AND INSTALL A SYSTEM OF CONDUIT RACEWAYS, OUTLET BOXES, PULL WIRES, AND TERMINAL BOARDS AS SHOWN ON THE DRAWINGS. TELEPHONE SWITCHING APPARATUS, CONDUCTORS, INSTRUMENTS, MISCELLANEOUS EQUIPMENT AND APPURTENANCES ARE NOT PART OF THIS CONTRACT AND WILL BE PROVIDED AND INSTALLED BY OTHERS.

B. CONDUITS FOR TELEPHONE WALL OUTLETS AND DATA WIRING SHALL BE A MINIMUM OF 1" UNLESS NOTED OTHERWISE.

C. FURNISH AND INSTALL A 3/4" THICK, FIRE-TREATED, PLYWOOD TELECOM BACKBOARD AT LOCATION SHOWN ON THE DRAWINGS. PAINT WITH FIRE RETARDANT "P-1B" OR AS DIRECTED BY TENANT'S CONSTRUCTION MANAGER. THE PLYWOOD BACKBOARD SHALL BE SECURELY ATTACHED TO THE BUILDING WALLS TO SUPPORT RELAY PANELS, TERMINAL BLOCKS AND OTHER HARDWARE WEIGHING APPROXIMATELY 10 POUNDS PER SQUARE FOOT.

D. CONDUIT RUNS FOR DATA AND TELEPHONE SHALL BE CONTINUOUS WITH NO JUNCTION BOXES EXCEPT AS NOTED ON DRAWINGS. THIS INCLUDES BUT IS NOT LIMITED TO RUNS BETWEEN TELEPHONE BOARD, MANAGER'S OFFICE, SOUND SYSTEM, CASHWRAPS AND TELEPHONE SETS.

E. FURNISH AND INSTALL PULL STRING IN EMPTY CONDUITS. LABEL CONDUITS FOR PURPOSE DESIGNATED.

F. IF NOT EXISTING AND SPECIFIED TO BE REUTILIZED, FURNISH AND INSTALL #6 COPPER GROUND WIRE FROM TELECOM BACKBOARD TO RESPECTIVE 120/208 VOLT TENANT PANELBOARD - GROUND PER TELEPHONE COMPANY'S REQUIREMENTS.

G. OUTLET BOXES TO BE 4" SQUARE MINIMUM WITH SINGLE DEVICE COVER AND TELEPHONE PLATE.

27 05 15 INTERIOR COMMUNICATIONS PATHWAYS

A. INTERIOR COMMUNICATIONS PATHWAYS SHALL BE FURNISHED AND INSTALLED BY THE GENERAL CONTRACTOR AND BY THE TELECOMMUNICATIONS CONTRACTOR AS SPECIFIED HEREIN.

B. INSTALL CONDUITS AS DETAILED IN DRAWINGS.

27 11 00 HORIZONTAL CABLING AND CONNECTIVITY

A. PROVIDE A 10/100/1000 MBPS FULL-DUPLEX TRANSMISSION ETHERNET NETWORK OVER 4-PAIR, CATEGORY 6 UTP HORIZONTAL CABLING. THE SYSTEM SHALL BE A CERTIFIED SOLUTION BY THE CONNECTIVITY MANUFACTURER. THE HORIZONTAL INFRASTRUCTURE SHALL SUPPORT BOTH VOICE AND DATA APPLICATIONS.

B. THIS SECTION INCLUDES WIRE, CABLE, CONNECTING DEVICES, INSTALLATION, AND TESTING FOR WIRING SYSTEMS TO BE USED AS SIGNAL PATHWAYS FOR VOICE, VIDEO, AND DATA TRANSMISSION. THE SYSTEM SHALL INCLUDE BUT NOT BE LIMITED TO THE FOLLOWING:

1. MOUNTING ELEMENTS
2. UNSHIELDED TWISTED-PAIR CABLE.
3. PATCH, STATION, AND CROSS CONNECT CORDS
4. JACKS AND FACEPLATES
5. TERMINATION AND PATCH PANELS

C. MANUFACTURERS: SUBJECT TO COMPLIANCE WITH REQUIREMENTS, PROVIDE PRODUCTS BY ONE OF THE FOLLOWING:

1. COPPER CABLES (UTP):
   a. BERK-TEK, INC.
   b. BELDEN
   c. MOHAWK
   d. GENERAL
   e. UNIPRISE
2. MODULAR JACKS & FACEPLATES:
   a. LEVITON
   b. HUBBELL
   c. ORTRONICS
   d. PANDUIT
   e. UNIPRISE

D. HORIZONTAL CABLES FOR VOICE/DATA/VIDEO INFRASTRUCTURE:

1. LISTED AS COMPLYING WITH CATEGORY 6 OF TIA/EIA-568-C.
2. CONDUCTORS: NO. 23 AWG, SOLID COPPER, THERMOPLASTIC-INSULATED.
3. UTP CABLE: FOUR-PAIR, INDIVIDUALLY TWISTED PAIRS OF CONDUCTORS; COLOR-CODED; ENCLOSED IN A JACKET.
4. CABLE RATING: PLENUM - LISTED FOR USE IN AIR-HANDLING SPACES, NON-PLENUM IN OTHER AREAS.
5. CABLE COLOR CODING: BLUE FOR DATA, YELLOW FOR VOICE, AND WHITE FOR VIDEO.

E. WORKSTATION OUTLETS: SINGLE CATEGORY 6E JACK CONNECTOR MOUNTED IN FACEPLATE.

1. FACEPLATE: HIGH IMPACT PLASTIC; COLOR TO BE WHITE.
2. MOUNTING: FLUSH, UNLESS OTHERWISE INDICATED.
3. LABELING: SHALL HAVE INTEGRAL LABEL WITH LABEL COVER.
4. JACK SPACES: AS INDICATED ON THE DRAWINGS WITH ANY NECESSARY BLANKS. BLANKS SHALL MATCH FACEPLATE COVER.

F. WIRING METHOD: INSTALL HORIZONTAL CABLING IN RACEWAY EXCEPT WITHIN RACKS AND ENCLOSURES, IN ACCESSIBLE CEILING SPACES, AND ROUTED VERTICALLY IN GYPSUM BOARD PARTITIONS, WHERE OPEN-CABLE WIRING METHOD MAY BE USED. CONCEAL RACEWAY AND CABLING EXCEPT IN UNFINISHED SPACES. IN ACCESSIBLE CEILINGS, USE APPROPRIATELY SIZED J-HOOKS TO SUPPORT THE CABLING EVERY FOUR FEET (MAXIMUM).

G. INSTALL CABLE USING TECHNIQUES, PRACTICES, AND METHODS THAT ARE CONSISTENT WITH CATEGORY 6 RATING OF COMPONENTS AND THAT INSURE CATEGORY 6 PERFORMANCE OF COMPLETED AND LINKED SIGNAL PATHS, END TO END.

H. DO NOT BEND CABLE IN HANDLING OR IN INSTALLING TO SMALLER RADII THAN MINIMUMS RECOMMENDED BY MANUFACTURER.

I. HORIZONTAL CABLES: LABEL CABLES AT THE WORK AREA END AND AT THE CLOSET END WITH THE PATCH PANEL PORT NUMBER. LABEL EACH CABLE WITHIN 3 INCHES OF EACH TERMINATION, WHERE IT IS ACCESSIBLE IN A CABINET OR JUNCTION OR OUTLET BOX, AND ELSEWHERE AS INDICATED.

J. WORKSTATION: LABEL CABLES WITHIN OUTLET BOXES AND NEATLY TYPED ON THE INTEGRAL LABEL IN THE FACEPLATE WITH THE PATCH PANEL PORT NUMBER.

K. WARRANTY PERIOD FOR COMMUNICATIONS CONNECTIVITY (INCLUDING COPPER): MANUFACTURER'S STANDARD, BUT NOT LESS THAN 25 YEARS FROM DATE OF CONTRACT COMPLETION.

27 22 00 DATA NETWORK EQUIPMENT

A. THE LOCAL AREA NETWORK (LAN) SHALL BE CAPABLE OF 10/100/1000 MB/S FULL DUPLEX DATA TRANSMISSION VIA 4-PAIR CAT 6 UTP CABLE TO EVERY DATA JACK OUTLET. EQUIPMENT SHALL BE THE LATEST MODEL AVAILABLE AT THE TIME OF DELIVERY AND INSTALLATION.

B. ETHERNET SWITCHES AND NETWORK MANAGEMENT SOFTWARE:

1. 3COM
2. CISCO
3. HP

C. ETHERNET SWITCHES:

1. PROVIDE RACK MOUNTED SWITCHES.
2. SWITCHES SHALL BE RATED 10/100/1000 BASE-T LINE SWITCHING SPEED (RJ-45).
3. SWITCHES SHALL HAVE TWENTY-FOUR 100BASE-T PORTS
4. SWITCH FEATURES SHALL INCLUDE, BUT NOT LIMITED TO:
   a. STORE-AND-FORWARD SWITCHING
   b. FULL/HALF DUPLEX AUTO-NEGOTIATION
   c. BACK PRESSURE FLOW CONTROL FOR HALF-DUPLEX
   d. BROADCAST STORM SUPPRESSION
   e. 802.1D SPANNING TREE PROTOCOL (STP)
   f. 802.1W RAPID SPANNING TREE PROTOCOL (RSTP)
   g. 802.1Q VLAN SUPPORT
   h. 802.1P TRAFFIC PRIORITIZATION
   i. i802.3X FULL-DUPLEX FLOW CONTROL
   j. j802.3AD LINK AGGREGATION.
   k. IGMP V1 AND V2 SNOOPING.
5. ADVANCED QUALITY OF SERVICE: SHALL PRIORITIZE TRAFFIC TO ENSURE MAXIMUM NETWORK PERFORMANCE AND OPTIMIZE IP TELEPHONY, VIDEO, AND DATA.
6. EACH SWITCH SHALL SUPPORT THE FOLLOWING SNMP STANDARDS:
   a. ESNMP PROTOCOL (RFC1157)
   b. MIB-II (RFC 1213)
   c. BRIDGE MIB (RFC1493)
   d. RMON MIB II (RFC 2021)
   e. REMOTE MONITORING MIB (RC 1757)
   f. INTERFACE MIB (2233) STANDARDS:
7. EACH SWITCH SHALL SUPPORT THE FOLLOWING SECURITY
   a. RADIUS (RFC 2865, RFC 2869)
   b. SESSION ACCOUNTING (RFC 2866)
   c. IEEE 802.1X NETWORK LOGIN
   d. SSHV2.

D. INSTALL ETHERNET SWITCH COMPLETE AND VALIDATE CONNECTIVITY THROUGHOUT. ESTABLISH VLANS, IP ROUTING, AND IP SUBNETS PER OWNER'S DIRECTION.

28 31 11 DIGITAL ADDRESSABLE FIRE ALARM SYSTEM

A. EXISTING TO REMAIN FIRE ALARM BOOSTER PANEL. ~~MICROPROCESSOR CONTROLLED FIRE ALARM SYSTEM IN ACCORDANCE WITH THE SPECIFICATIONS , DRAWINGS, MALL REQUIREMENTS AND AS REQUIRED BY THE LOCAL AUTHORITY.~~

B. ACCEPTABLE MANUFACTURERS:

ACCEPTABLE MANUFACTURERS OF NEW FIRE ALARM SYSTEM DEVICES ARE SUBJECT TO COMPLIANCE WITH MALL REQUIREMENTS AND EXISTING TO BE REUTILIZED "BOSCH" MODEL D7212GV4 FIRE ALARM BOOSTER PANEL. MANUFACTURERS OFFERING FIRE ALARM SYSTEMS THAT MAY BE INCORPORATED INTO THE WORK ARE LIMITED TO COMPATIBILITY WITH THE EXISTING AND OVERALL MALL FIRE ALARM SYSTEM.

C. ~~GENERAL SYSTEM DESCRIPTION:~~

~~THE SUPERVISED, CODED, CLOSED-CIRCUIT TYPE SYSTEM SHALL BE SO ARRANGED THAT PULLING A MANUAL PULL STATION OR OPERATION OF ONE OF THE AUTOMATIC DETECTING DEVICES WILL REGISTER AN ALARM AT THE FIRE ALARM CONTROL PANEL. THIS WILL CAUSE IMMEDIATE AND CONTINUOUS OPERATION OF THE BUILDING ALARM SIGNALS TO SOUND THE GENERAL ALARM SIGNAL, UNTIL THE ALARM HAS BEEN ACKNOWLEDGED AT THE CONTROL PANEL.~~

D. ~~BASIC PERFORMANCE:~~

1. ~~ALARM, TROUBLE AND SUPERVISORY SIGNALS FROM REPORTING DEVICES SHALL BE ENCODED ONTO AN NFPA STYLE 4 (CLASS B) SIGNALING LINE CIRCUIT.~~
2. ~~INITIATION DEVICE CIRCUITS SHALL BE WIRED CLASS B (NFPA STYLE B).~~
3. ~~INDICATING APPLIANCE CIRCUITS SHALL BE WIRED STYLE Y (CLASS B).~~

E. ~~SUBMIT COORDINATED SHOP DRAWINGS TO THE ARCHITECT FOR APPROVAL.~~

F. ~~REFERENCES TO MANUFACTURER'S MODEL NUMBERS AND OTHER PERTINENT INFORMATION HEREIN IS INTENDED TO ESTABLISH MINIMUM STANDARDS OF PERFORMANCE, FUNCTION AND QUALITY.~~

G. ~~THE SYSTEM SHALL HAVE PROPER LISTING AND APPROVAL FROM THE FOLLOWING NATIONALLY RECOGNIZED AGENCIES:~~

1. ~~UL, UNDERWRITERS LABORATORIES, INC.~~
2. ~~NFPA 70, NATIONAL ELECTRICAL CODE (NEC).~~
3. ~~NFPA 72, NATIONAL FIRE ALARM CODE.~~

H. ~~MODULAR LABELING: THE FIRE ALARM CONTROL PANEL SHALL MEET THE MODULAR LISTING REQUIREMENTS OF UNDERWRITERS LABORATORIES, INC. TO FACILITATE SYSTEM CHANGES AND EXPANSIONS, AND TO ENSURE THAT SUBASSEMBLIES HAVE THE PROPER LISTING, EACH SUBASSEMBLY OF THE FACP SHALL CARRY THE APPROPRIATE UL MODULAR LABEL. THIS INCLUDES PRINTED CIRCUIT BOARD ASSEMBLIES, POWER SUPPLIES, AND ENCLOSURE PARTS.~~

I. EQUIPMENT COMPONENTS SHALL BE NEW AND THE MANUFACTURER'S CURRENT MODEL. MATERIALS, APPLIANCES, EQUIPMENT AND DEVICES SHALL BE TESTED AND LISTED BY A NATIONALLY RECOGNIZED APPROVALS AGENCY FOR USE AS PART OF A PROTECTED PREMISES PROTECTIVE SIGNALING (FIRE ALARM) SYSTEM. THE AUTHORIZED REPRESENTATIVE OF THE MANUFACTURER SHALL BE RESPONSIBLE FOR THE SATISFACTORY INSTALLATION OF THE COMPLETE SYSTEM.

J. INSTALL EQUIPMENT AND COMPONENTS IN STRICT COMPLIANCE WITH MANUFACTURER'S RECOMMENDATIONS. CONSULT THE MANUFACTURER'S INSTALLATION MANUALS FOR WIRING DIAGRAMS, SCHEMATICS, PHYSICAL EQUIPMENT SIZES, ETC., BEFORE BEGINNING SYSTEM INSTALLATION.

K. SECURELY ATTACH EQUIPMENT TO WALLS AND CEILING/FLOOR ASSEMBLIES.

L. INSTALL WIRING IN CONDUIT OR RACEWAY. CONDUIT FILL SHALL NOT EXCEED 40 PERCENT OF INTERIOR CROSS-SECTIONAL AREA WHERE THREE OR MORE CABLES ARE CONTAINED WITHIN A SINGLE CONDUIT.

M. CABLE MUST BE SEPARATED FROM ANY OPEN CONDUCTORS OF POWER OR CLASS 1 CIRCUITS, AND SHALL NOT BE PLACED IN ANY CONDUIT, JUNCTION BOX, OR RACEWAY CONTAINING THESE CONDUCTORS.

N. WIRING IN CONDUIT SHALL BE IN ACCORDANCE WITH LOCAL, STATE AND NATIONAL CODES (E.G., NEC ARTICLE 760) AND AS RECOMMENDED BY THE MANUFACTURER OF THE FIRE ALARM SYSTEM. NUMBER AND SIZE OF CONDUCTORS SHALL BE AS RECOMMENDED BY THE FIRE ALARM SYSTEM MANUFACTURER, BUT NOT LESS THAN #18 AWG (1.02 MM) FOR INITIATING DEVICE CIRCUITS AND SIGNALING LINE CIRCUITS, AND #12 AWG (1.63 MM) FOR INDICATING APPLIANCE CIRCUITS.

O. WIRE AND CABLE SHALL BE LISTED BY A RECOGNIZED TESTING AGENCY FOR USE WITH A PROTECTIVE SIGNALING SYSTEM.

P. VERIFY THE EXISTING CONNECTION OF THE EXISTING FIRE ALARM BOOSTER PANEL IS FROM A SEPARATE DEDICATED BRANCH CIRCUIT, MAXIMUM 20 AMPERES. ~~FIRE ALARM CONTROL PANEL PRIMARY POWER WIRING SHALL BE #12 AWG. THE CONTROL PANEL CABINET SHALL BE GROUNDED SECURELY TO THE BUILDING GROUNDING SYSTEM.~~

Q. ~~FIRE ALARM CONTROL PANEL SHALL BE BY APPROVED MANUFACTURERS LISTED ABOVE, AND SHALL BE SURFACE MOUNTED WHERE INDICATED ON PLAN. PROVIDE A REMOTE ANNUNCIATOR PANEL FOR RECESS MOUNTING AT THE LOCATION SHOWN ON THE PLAN.~~

R. ~~EXISTING STROBE LIGHTS TO REMAIN AND TO BE RELOCATED:~~

1. ~~SHALL OPERATE ON 24 VDC, NOMINAL.~~
2. ~~SHALL MEET ADA REQUIREMENTS AND THE FOLLOWING CRITERIA:~~
   a. ~~MINIMUM 75 CANDELA INTENSITY, UNLESS OTHERWISE SPECIFIED ON THE DRAWINGS.~~
   b. ~~MULTIPLE STROBES LOCATED IN THE SAME FIELD OF VIEW SHALL BE SYNCHRONIZED WITH OTHER STROBES IN THAT AREA.~~
   c. ~~LOCATE WALL-MOUNTED APPLIANCES 80 IN. ABOVE THE HIGHEST FLOOR LEVEL WITHIN THE SPACE OR 6 IN. BELOW THE CEILING, WHICHEVER IS LOWER.~~
   d. ~~APPLIANCES SHALL HAVE WHITE HOUSINGS WITH THE WORD "FIRE" IN RED UNLESS PROHIBITED BY LOCAL CODES OR MALL STANDARDS.~~
   e. ~~DEVICES SHALL BE WALL- OR CEILING-MOUNTED AS INDICATED ON THE PLANS.~~

S. ~~EXISTING AUDIBLE/VISUAL COMBINATION DEVICES (SPEAKER/STROBE) EXISTING TO REMAIN AND TO BE RELOCATED:~~

1. ~~VISUAL SIGNALS SHALL MEET THE APPLICABLE REQUIREMENTS OF STROBE LIGHTS AS SPECIFIED ABOVE.~~
2. ~~AUDIBLE SIGNALS SHALL BE 15DB ABOVE AMBIENT SOUND LEVEL.~~
3. ~~APPLIANCES SHALL HAVE WHITE HOUSINGS WITH THE WORD "FIRE" IN RED UNLESS PROHIBITED BY LOCAL CODES OR MALL STANDARDS.~~
4. ~~DEVICES SHALL BE WALL- OR CEILING-MOUNTED AS INDICATED ON THE PLANS.~~

T. ~~EXISTING TO BE RELOCATED MANUAL STATION AND PROVIDE MANUAL PULL STATION:~~

1. ~~PROVIDE ADDRESSABLE MANUAL STATIONS CONNECTED TO THE FIRE ALARM CONTROL PANEL SIGNALING LINE CIRCUIT (SLC) LOOPS.~~
2. ~~MANUAL STATIONS SHALL INCORPORATE KEY OPERATED TEST-RESET LOCKS.~~
3. ~~OPERATED STATIONS SHALL HAVE POSITIVE, VISUAL INDICATION OF OPERATION THAT CANNOT BE RESET WITHOUT THE USE OF A KEY.~~
4. ~~MANUAL STATIONS SHALL BE SUITABLE FOR SEMIFLUSH MOUNTING AS SHOWN ON THE PLANS, AND SHALL BE INSTALLED NOT LESS THAN 42 INCHES, AND NOT MORE THAN 44 INCHES ABOVE THE FINISHED FLOOR.~~

U. DUCT SMOKE DETECTORS:

1. FURNISH AND WIRE DUCT SMOKE DETECTORS. THEY SHALL BE OF THE SOLID STATE PHOTOELECTRIC TYPE CONTAINING NO RADIOACTIVE MATERIALS AND SHALL OPERATE ON THE LIGHT SCATTERING PHOTODIODE PRINCIPLE. DETECTORS SHALL BE DESIGNED TO IGNORE INVISIBLE AIRBORNE PARTICLES OR SMOKE DENSITIES THAT ARE BELOW THE FACTORY SET ALARM POINT. DUCT SMOKE DETECTORS SHALL BE INSTALLED BY MECHANICAL CONTRACTOR IN THE DUCTWORK.

V. DUCT DETECTOR REMOTE TEST AND ALARM STATIONS:

1. KEY-OPERATED TEST/RESET OPERATION.
2. PIEZO STYLE ANNUNCIATOR WITH A dBA RATING OF 85 AT A DISTANCE OF 10'-0".
3. LED INDICATOR (ADD-ON IF REQUIRED).

W. AT THE FINAL INSPECTION, A FACTORY TRAINED REPRESENTATIVE OF THE MANUFACTURER OF THE MAJOR EQUIPMENT SHALL DEMONSTRATE THAT THE SYSTEM FUNCTIONS PROPERLY IN EVERY RESPECT.

X. THE CONTRACTOR ANDTHE SYSTEMS MANUFACTURER'S REPRESENTATIVES SHALL PROVIDE A TYPEWRITTEN "SEQUENCE OF OPERATION" TO THE TENANT.

Y. BEFORE FINAL APPROVAL OF THE FIRE ALARM SYSTEM IS REQUESTED, PROVIDE THE ARCHITECT, IN WRITING, A STATEMENT THAT REQUIREMENTS OF THE CITY BUILDING INSPECTION AND FIRE DEPARTMENTS HAVE BEEN MET IN THE INSTALLATION OF THE FIRE ALARM SYSTEM.

Z. SUBMIT TO THE TENANT, UPON COMPLETION OF THE SYSTEM INSTALLATION, A CONTRACTOR'S FIRE ALARM SYSTEM CERTIFICATION AND DESCRIPTION FORM AS OUTLINED BY NFPA 72, AND AN APPROVED INSPECTION FORM FOR THE FIRE ALARM PORTION OF THE SYSTEM.

(END OF ELECTRICAL SPECIFICATIONS)

PROFESSIONAL CERTIFICATION. I HEREBY CERTIFY THAT THESE DOCUMENTS WERE PREPARED OR APPROVED BY ME, AND THAT I AM A DULY LICENSED PROFESSIONAL ENGINEER UNDER THE LAWS OF THE STATE OF MARYLAND, LICENSE NO. 32448, EXPIRATION DATE: 02-07-2020 .

OWNER:

5A LANDS' END LANE
DODGEVILLE, WI 53595

ARCHITECT / ENGINEER:

SHREMSHOCK
Shremshock Engineering, Inc.
7400 W. Campus Rd. Suite 150 New Albany, OH 43054
t: 614 545 4550 | f: 614 545 4555 | shremshock.com

©2019 THE ARCHITECT / ENGINEER ASSUMES NO RESPONSIBILITY OR LIABILITY FOR THE USE OF THESE PLANS FOR ANY PROJECT OTHER THAN SPECIFICALLY AUTHORIZED BY THEM AND SIGNED AND SEALED FOR SUCH SPECIFIC LOCATION IN THE STATE, PROVINCE OR TERRITORY SHOWN ON THE SEAL. THIS BUILDING USE IS ONLY APPLICABLE IN AREAS MEETING THE STATED DESIGN CRITERIA.

STORE NO: TBD

PROJECT LOCATION:
CONGRESSIONAL PLAZA
1667 ROCKVILLE PIKE
SPACE #06
ROCKVILLE, MD 20852

DESIGN TYPE: -

REVISIONS:

REQUIRED BY:		DATE
1	CLIENT, LANDLORD & B.D. COMMENTS	07/19/2019

* INDICATES NO REVISION TO THIS SHEET

ELECTRICAL SPECIFICATIONS

DRAWN BY: TAV CHECKED BY: RAP

DATE ISSUED: 06/07/2019
PROJECT NO: 190148
DRAWING NO: E5.0

ELECTRICAL SPECIFICATIONS A

Section # & Req.ID	Final Inspection	Complies?	Comments/Assumptions
C303.3, C408.2.5.2 [FI17][3]	Furnished O&M instructions for systems and equipment to the building owner or designated representative.	☐Complies ☐Does Not ☐Not Observable ☐Not Applicable	Requirement will be met.
C405.4.1 [FI18][1]	Interior installed lamp and fixture lighting power is consistent with what is shown on the approved lighting plans, demonstrating proposed watts are less than or equal to allowed watts.	☐Complies ☐Does Not ☐Not Observable ☐Not Applicable	*See the Interior Lighting fixture schedule for values.*
C408.2.5.1 [FI16][3]	Furnished as-built drawings for electric power systems within 90 days of system acceptance.	☐Complies ☐Does Not ☐Not Observable ☐Not Applicable	Requirement will be met.
C408.3 [FI33][1]	Lighting systems have been tested to ensure proper calibration, adjustment, programming, and operation.	☐Complies ☐Does Not ☐Not Observable ☐Not Applicable	Requirement will be met. **Location on plans/spec:** E3.0

Additional Comments/Assumptions:

1 High Impact (Tier 1) | 2 Medium Impact (Tier 2) | 3 Low Impact (Tier 3)

THIS PAGE INTENTIONALLY LEFT BLANK

COM*check* Software Version 4.1.1.0

Inspection Checklist

Energy Code: 2015 IECC

Requirements: 100.0% were addressed directly in the COM*check* software

Text in the "Comments/Assumptions" column is provided by the user in the COMcheck Requirements screen. For each requirement, the user certifies that a code requirement will be met and how that is documented, or that an exception is being claimed. Where compliance is itemized in a separate table, a reference to that table is provided.

Section # & Req.ID	Plan Review	Complies?	Comments/Assumptions
C103.2 [PR4][1]	Plans, specifications, and/or calculations provide all information with which compliance can be determined for the interior lighting and electrical systems and equipment and document where exceptions to the standard are claimed. Information provided should include interior lighting power calculations, wattage of bulbs and ballasts, transformers and control devices.	☐Complies ☐Does Not ☐Not Observable ☐Not Applicable	Requirement will be met. **Location on plans/spec:** E2.0, E3.0, E5.0, E6.0

Additional Comments/Assumptions:

1 High Impact (Tier 1) | 2 Medium Impact (Tier 2) | 3 Low Impact (Tier 3)

Section # & Req.ID	Rough-In Electrical Inspection	Complies?	Comments/Assumptions
C405.2.1 [EL15][1]	Lighting controls installed to uniformly reduce the lighting load by at least 50%.	☐Complies ☐Does Not ☐Not Observable ☐Not Applicable	Requirement will be met. **Location on plans/spec:** E2.0, E3.0
C405.2.1 [EL18][1]	Occupancy sensors installed in required spaces.	☐Complies ☐Does Not ☐Not Observable ☐Not Applicable	**Exception:** Automatic-on controls are allowed in corridors, stairways, restrooms, primary building entrance areas and lobbies, and areas where manual-on controls could impact safety or security.
C405.2.1, C405.2.2.3 [EL23][2]	Independent lighting controls installed per approved lighting plans and all manual controls readily accessible and visible to occupants.	☐Complies ☐Does Not ☐Not Observable ☐Not Applicable	Requirement will be met. **Location on plans/spec:** E2.0, E3.0
C405.2.2.1 [EL22][2]	Automatic controls to shut off all building lighting installed in all buildings.	☐Complies ☐Does Not ☐Not Observable ☐Not Applicable	Requirement will be met. **Location on plans/spec:** E2.0, E3.0
C405.2.3 [EL16][2]	Daylight zones provided with individual controls that control the lights independent of general area lighting.	☐Complies ☐Does Not ☐Not Observable ☐Not Applicable	**Exception:** Sidelight zones on first floor in Group A-2 and M occupancies.
C405.2.3, C405.2.3.1, C405.2.3.2 [EL20][1]	Primary sidelighted areas are equipped with required lighting controls.	☐Complies ☐Does Not ☐Not Observable ☐Not Applicable	**Exception:** Sidelight zones on first floor in Group A-2 and M occupancies.
C405.2.3, C405.2.3.1, C405.2.3.3 [EL21][1]	Enclosed spaces with daylight area under skylights and rooftop monitors are equipped with required lighting controls.	☐Complies ☐Does Not ☐Not Observable ☐Not Applicable	**Exception:** Requirement does not apply.
C405.2.4 [EL4][1]	Separate lighting control devices for specific uses installed per approved lighting plans.	☐Complies ☐Does Not ☐Not Observable ☐Not Applicable	Requirement will be met. **Location on plans/spec:** E2.0, E3.0
C405.2.4 [EL8][1]	Additional interior lighting power allowed for special functions per the approved lighting plans and is automatically controlled and separated from general lighting.	☐Complies ☐Does Not ☐Not Observable ☐Not Applicable	Requirement will be met. **Location on plans/spec:** E2.0, E3.0, E6.0
C405.3 [EL6][1]	Exit signs do not exceed 5 watts per face.	☐Complies ☐Does Not ☐Not Observable ☐Not Applicable	Requirement will be met. **Location on plans/spec:** E2.0, E3.0

Additional Comments/Assumptions:

1 High Impact (Tier 1) | 2 Medium Impact (Tier 2) | 3 Low Impact (Tier 3)

COM*check* Software Version 4.1.1.0

Interior Lighting Compliance Certificate

Project Information

Energy Code: 2015 IECC
Project Title: Lands' End - Congressional Plaza
Project Type: Alteration

Construction Site:
1667 Rockville Pike
Space #06
Rockville, MD 20852

Owner/Agent:
Lands' End
5A Lands' End Lane
Dodgeville, WI 53595

Designer/Contractor:
Shremshock Engineering, Inc.
7400 W. Campus Rd.
Suite 150
New Albany, OH 43054

Allowed Interior Lighting Power

A Area Category	B Floor Area (ft2)	C Allowed Watts / ft2	D Allowed Watts (B X C)
1-Sales Area (Retail:Sales Area)	6470	1.59	10287
Allowance: Furniture, clothing, cosmetics highlighting / Fix. ID: T1	50 (a)	1.40	70 (b)
Allowance: Furniture, clothing, cosmetics highlighting / Fix. ID: T1	4100 (a)	1.40	4530 (b)
2-Fitting Room Area (Retail:Dressing/Fitting Room)	439	0.71	312
5-Office (Common Space Types:Office - Enclosed)	88	1.11	98
4-Toilet Rooms (Common Space Types:Restrooms)	153	0.98	150
3-NonSales/Stock (Warehouse:Medium/Bulky/Pallet Material Storage)	1311	0.58	760
6-Hallway/Corridor (Common Space Types:Corridor/Transition <8 ft wide)	110	0.66	73
Supplemental Allowed Watts (null) =			470
Total Allowed Watts =			16750

(a) Area claimed may exceed total floor area when Retail Merchandise Highlighting allowance(s) are specified.
(b) Allowance is (B x C) or the actual wattage of the fixtures given in Proposed Power section, whichever is less.
(c) Supplemental watts must be associated with retail merchandise highlighting fixtures.

Proposed Interior Lighting Power

A Fixture ID : Description / Lamp / Wattage Per Lamp / Ballast	B Lamps/ Fixture	C # of Fixtures	D Fixture Watt.	E (C X D)
Sales Area (Retail:Sales Area 6470 sq.ft.)				
Track(SW Closed): T1: SW Track (Closed-6Ft): Wattage based on 6 feet of track Exemption:Retail Display Window	0	0	180	Exempt
Track(SW Open): T1: SW Track (Open-18Ft): Wattage based on 18 feet of track	0	0	540	540
Track(Gen): T1: Gen SalesTrack (291Ft/156H): Wattage based on 291 feet of track	0	0	8730	8730
Track(Display): T1: Disp Sales Track (151Ft/149H): Wattage based on 151 feet of track	0	0	4530	4530
LED(Deco): P-1: Decorative Pendant: Other:	1	4	10	40
LED(Deco): P-2: Decorative Pendant: Other:	1	6	10	60
LED(Gen): R-2: 6" Recessed LED Downlight: Other:	1	14	28	392
Fitting Room Area (Retail:Dressing/Fitting Room 439 sq.ft.)				
LED(Gen): R-3: 6" Recessed LED Downlight: Other:	1	14	20	280
Incandescent: W-3: Picture Light: Other:	1	1	80	80
Office (Common Space Types:Office - Enclosed 88 sq.ft.)				
LED Wrap: CL-1/EM: 1'x4' LED Wrap: Other: Electronic:	1	1	48	48
Toilet Rooms (Common Space Types:Restrooms 153 sq.ft.)				
Fluorescent: (E)/EM: 2'x2' Troffer: Other: Electronic:	1	3	26	78
NonSales/Stock (Warehouse:Medium/Bulky/Pallet Material Storage 1311 sq.ft.)				
LED Strip: CH2/EM/NL: 4' LED Strip: Other: Electronic:	1	16	48	768
Linear Fluorescent 5: (E): 4' Fluor Strip: 48" T8 32W: Electronic:	2	1	65	65
Hallway/Corridor (Common Space Types:Corridor/Transition <8 ft wide 110 sq.ft.)				
LED Strip copy 1: CH2/EM/NL: 4' LED Strip: Other: Electronic:	1	6	48	288
Total Proposed Watts =				15899

Interior Lighting PASSES

Interior Lighting Compliance Statement

Compliance Statement: The proposed interior lighting alteration project represented in this document is consistent with the building plans, specifications, and other calculations submitted with this permit application. The proposed interior lighting systems have been designed to meet the 2015 IECC requirements in COM*check* Version 4.1.1.0 and to comply with any applicable mandatory requirements listed in the Inspection Checklist.

Reece A. Prather, P.E. - Principal
Name - Title | Signature | Date

PROFESSIONAL CERTIFICATION. I HEREBY CERTIFY THAT THESE DOCUMENTS WERE PREPARED OR APPROVED BY ME, AND THAT I AM A DULY LICENSED PROFESSIONAL ENGINEER UNDER THE LAWS OF THE STATE OF MARYLAND, LICENSE NO. 32448, EXPIRATION DATE: 02-07-2020 .

OWNER:

5A LANDS' END LANE
DODGEVILLE, WI 53595

ARCHITECT / ENGINEER:

SHREMSHOCK
Shremshock Engineering, Inc.
7400 W. Campus Rd. Suite 150 New Albany, OH 43054
t: 614 545 4550 | f: 614 545 4555 | shremshock.com

©2019 THE ARCHITECT / ENGINEER ASSUMES NO RESPONSIBILITY FOR THE USE OF THESE PLANS FOR ANY PROJECT OTHER THAN SPECIFICALLY AUTHORIZED BY THEM AND SIGNED AND SEALED FOR SUCH SPECIFIC LOCATION IN THE STATE, PROVINCE OR TERRITORY SHOWN ON THE SEAL. THIS BUILDING USE IS ONLY APPLICABLE IN AREAS MEETING THE STATED DESIGN CRITERIA.

LANDS' END

STORE NO:
TBD

PROJECT LOCATION:
CONGRESSIONAL PLAZA
1667 ROCKVILLE PIKE
SPACE #06
ROCKVILLE, MD 20852

DESIGN TYPE:
-

REVISIONS:

REQUIRED BY:		DATE
1 TAV	CLIENT, LANDLORD & B.D. COMMENTS	07/19/2019

* INDICATES NO REVISION TO THIS SHEET

ENERGY COMPLIANCE FORMS

DRAWN BY: TAV CHECKED BY: RAP

DATE ISSUED: 06/07/2019
PROJECT NO: 190148
DRAWING NO:
E6.0

NOT USED

M

HVAC LEGEND AND ABBREVIATIONS

N.T.S.
-

H

	THERMOSTAT
	SENSOR
	CARBON DIOXIDE SENSOR
SD	DUST SMOKE DETECTOR
	UNDERCUT DOOR
	DUCT OFFSET
	SUPPLY DUCT - UP
	SUPPLY DUCT - DN
	RA OR EXH. DUCT UP
	RA OR EXH. DUCT DN
	ELBOW TURNING VANES
	FIRE DAMPER (F DPR)
	MANUAL BALANCE DPR
	TRANSITION
	DUCTWORK
	(E) DUCTWORK
	COND PIPE
	HYDRONIC PIPE
	(E) HYDRONIC PIPE
	(E) WATER PIPE
	(E) SANITARY PIPE
FP	SPRINKLER PIPE
	UPRIGHT SPRINKLER HEAD
	CONCEALED SPRINKLER HEAD
	EXISTING SPRINKLER HEAD
	CONNECT TO EXISTING
	SUPPLY DIFFUSER
	RETURN GRILLE
	EXHAUST GRILLE/FAN
	ACCESS DOOR
	SPIN-IN FITTING
	SPIN-IN FITTING W/ MANUAL BALANCE DPR
	FLEX DUCT CONNECTION

(E)EX	EXISTING
(R)	RELOCATED
X"Ø	ROUND DUCT
AB	ABOVE
ACCU	AIR-COOLED CONDENSING UNIT
AD	ACCESS DOOR
AFF	ABOVE FINISHED FLOOR
AHU	AIR HANDLING UNIT
ARCH	ARCHITECT
BDD	BACKDRAFT DAMPER
BEL	BELOW
BLDG	BUILDING
CFM	CUBIC FEET PER MINUTE
CLG	CEILING
COND	CONDENSATE
CONT	CONTINUATION
CONTR	CONTRACTOR
COORD	COORDINATE
CS	CONDENSER WATER SUPPLY
CR	CONDENSER WATER RETURN
CWS	CHILLED WATER SUPPLY
CWR	CHILLED WATER RETURN
DCW	DOMESTIC COLD WATER
DIFF	DIFFUSER
DISC	DISCONNECT
DN	DOWN
DPR	DAMPER
EA	EACH
EXH	EXHAUST
F DPR	FIRE DAMPER
FLEX	FLEXIBLE
FLR	FLOOR
GC	GENERAL CONTRACTOR
HP	HORSEPOWER
MAX	MAXIMUM
MCA	MIN CIRCUIT AMPACITY
MIN	MINIMUM
MTD	MOUNTED
NTS	NOT TO SCALE
OA	OUTSIDE AIR
RA	RETURN AIR
RTU	ROOFTOP UNIT
SA	SUPPLY AIR
TV	TURNING VANES
TYP	TYPICAL
WSHP	WATER-SOURCE HEAT PUMP
W/	WITH

1. (LL)RTU-1,2,3&4: LANDLORD TO INSTALL NEW ELECTRIC COOLING/GAS HEAT ROOFTOP UNIT. GENERAL CONTRACTOR SHALL FURNISH AND INSTALL THREE SETS OF FILTERS. CHANGE FILTERS AFTER FINAL STORE CLEANING AND AGAIN PRIOR TO AIR BALANCE. REBALANCE FAN. RE-LABEL ROOFTOP UNIT PER LANDLORD REQUIREMENTS AND PER SPECIFICATIONS. FIELD VERIFY EXACT LOCATION AND ALL REQUIREMENTS.
2. GENERAL CONTRACTOR SHALL INSTALL A HONEYWELL ADJUSTABLE PROGRAMMABLE THERMOSTAT. SEE M2.0 FOR MODEL NUMBER. THERMOSTAT SHALL INCLUDE REMOTE SENSOR CAPABILITIES. GENERAL CONTRACTOR TO FURNISH AND INSTALL PLENUM RATED CONTROL WIRING BETWEEN HVAC UNIT AND THERMOSTAT. PROVIDE ALL MANUALS AND INSTRUCTIONS TO THE STORE MANAGER (INSTRUCT THE STORE MANAGER ON OPERATION UPON TURNOVER) AND THE PROJECT MANAGER (FOR THE CLOSEOUT PACKAGE). SPACE TEMPERATURE SETPOINT - UNOCCUPIED SETPOINTS SHALL BE 78°F COOLING AND 60°F HEATING. WARM-UP/OCCUPIED SETPOINTS SHALL BE 72°F COOLING AND 68°F HEATING. SETPOINTS SHALL BE LOCKED OUT TO PREVENT ADJUSTMENT MORE THAN 3°F UP OR DOWN FROM DEFAULT.
3. GENERAL CONTRACTOR SHALL INSTALL A HONEYWELL REMOTE SENSOR FOR EACH THERMOSTAT WHERE INDICATED. SEE M2.0 FOR MODEL NUMBER GENERAL CONTRACTOR TO FURNISH AND INSTALL PLENUM RATED CONTROL WIRING FROM REMOTE SENSOR TO THERMOSTAT AND CONNECT PER MANUFACTURER'S INSTRUCTIONS.
4. (E)EF: GENERAL CONTRACTOR SHALL REUSE EXISTING TOILET EXHAUST FAN IN EXISTING RESTROOM. CLEAN AND ADJUST AS REQUIRED FOR PROPER OPERATION. REPLACE/REPAIR ANY DEFECTIVE PARTS. FIELD VERIFY EXACT LOCATION AND ALL REQUIREMENTS.
5. SUPPLY AND RETURN AIR DUCTS SHALL BE MADE FULL SIZE OF EQUIPMENT OPENING AND SECURELY CONNECTED TO UNIT WITH FLEXIBLE DUCT CONNECTIONS. TRANSITION TO SIZE INDICATED ON PLANS IN THE VERTICAL DROP FROM THE UNIT AS REQUIRED.
6. AC-1: GENERAL CONTRACTOR TO PROVIDE AIR CURTAIN. AIR CURTAIN TO BE MOUNTED BELOW CEILING AND ABOVE DOOR. BOTTOM OF AIR CURTAIN TO BE NO MORE THAN 10'-0" A.F.F. SEE AIR CURTAIN SCHEDULE ON SHEET M2.1 FOR ADDITIONAL INFORMATION. REFER TO ELECTRICAL SHEETS FOR SPEED SWITCH/HEAT SWITCH AND DOOR CONTACT INFORMATION. SEE ARCHITECTURAL SHEETS A-81.00 AND A-82.00 FOR ADDITIONAL INFORMATION.
7. SMOKE DETECTOR FURNISHED AND INSTALLED BY GENERAL CONTRACTOR IN RETURN AIR PATH. UPON DETECTION OF SMOKE, DETECTOR SHALL SIGNAL LANDLORD FIRE ALARM SYSTEM AND UNIT SHALL SHUT DOWN. FIELD VERIFY AND COORDINATE ALL REQUIREMENTS WITH LANDLORD PRIOR TO BID AND INCLUDE ALL MATERIAL AND LABOR COSTS FOR THIS WORK IN BID.
8. REUSE AS MUCH AS POSSIBLE FROM THE EXISTING SPRINKLER SYSTEM AND ALARM SYSTEM. MODIFY SYSTEM AS REQUIRED TO MEET CODE. FIELD COORDINATE ALL REQUIREMENTS WITH LANDLORD, EXISTING CONDITIONS AND AUTHORITY HAVING JURISDICTION.
9. SPRINKLER HEADS SHOWN FOR REFERENCE ONLY. LICENSED FIRE PROTECTION PROFESSIONAL TO DETERMINE ACTUAL AMOUNT AND LOCATION OF HEADS. ALIGN SPRINKLER HEAD LOCATIONS WITH LIGHTS AND OTHER CEILING ELEMENTS. COORDINATE WITH LANDLORD AND TENANT.
10. DASHED LINE REPRESENTS THE MANUFACTURER'S RECOMMENDED CLEARANCE.
11. GENERAL CONTRACTOR SHALL VERIFY EXISTING DOOR IS UNDERCUT 1" FOR MAKE-UP AIR OR SHALL COORDINATE TO UNDERCUT EXISTING DOOR 1" AS REQUIRED. NEW DOOR TO BE UNDERCUT 1" FOR MAKE-UP AIR. FIELD VERIFY EXACT LOCATION AND ALL REQUIREMENTS.
12. EXISTING UTILITIES (DUCTWORK, PIPING, CONDUIT, ETC.) TO REMAIN. WHERE KNOWN, TYPE AND ELEVATION ARE AS NOTED. FIELD VERIFY EXACT SIZE, LOCATION, ELEVATION AND ALL OTHER REQUIREMENTS PRIOR TO BID.
13. TRANSFER GRILLE TO BE MOUNTED AS HIGH AS POSSIBLE. IN AREAS WHERE THERE IS A CEILING; MOUNT TRANSFER GRILLE ABOVE CEILING. TRANSFER GRILLES VISIBLE IN SALES AREA SHALL ALL BE MOUNTED AT THE SAME HEIGHT AS EACH OTHER.
14. FURNISH AND INSTALL A 1"X1" ALUMINUM WIRE MESH SCREEN OVER RETURN AIR OPENING IN TOP OF DUCT WITH END OF DUCT CAPPED. 20"X28" OPENING FOR (LL)RTU-1,2,3&4 AND BALANCE MANUAL DAMPER TO 2,150 CFM.
15. GENERAL CONTRACTOR TO INSTALL DUCT ABOVE SPRINKLER LINE. IF NOT POSSIBLE, GENERAL CONTRACTOR TO CONTACT ENGINEER OF RECORD.
16. DUCT TO BE RUN INBETWEEN JOIST AS HIGH AS POSSIBLE. DROP DOWN TO RUN BENEATH JOISTS AS SHOWN. DUCT TRANSITIONS TO HAVE TOP OF DUCT TIGHT TO STRUCTURE TO ALLOW FOR DUCT HEIGHT TO BE AS HIGH AS POSSIBLE.
17. FURNISH AND INSTALL FIRE DAMPERS AS SHOWN WITH ACCESS PANELS IN DUCT FOR RESET OF FIRE DAMPERS. FIELD VERIFY AND COORDINATE ALL REQUIREMENTS WITH LANDLORD. LABEL PER CODE REQUIREMENTS.

MECHANICAL CODED NOTES

C

1. PROVIDE ALL LABOR, MATERIALS, EQUIPMENT, SERVICES, TOOLS, TRANSPORTATION, INCIDENTALS AND DETAILS NECESSARY TO PROVIDE A COMPLETE AND FULLY OPERATIONAL MECHANICAL SYSTEM AS SHOWN ON THE DRAWINGS, CALLED FOR IN THE SPECIFICATIONS AND AS REQUIRED BY THE JOB CONDITIONS. ALL WORK NOT SPECIFICALLY NOTED AS BEING PROVIDED BY THE LANDLORD SHALL BE PROVIDED BY THE GENERAL CONTRACTOR. ALL WORK (MATERIALS, FABRICATION, INSTALLATION, ETC.) SHALL COMPLY WITH THE APPLICABLE SECTIONS OF ALL STATE AND LOCAL CODES (MECHANICAL CODE, BUILDING CODE, ENERGY CODE, ETC.) AND THE LATEST EDITION OF SMACNA.
2. READ THE SPECIFICATIONS AND REVIEW DRAWINGS FOR ALL DIVISIONS OF WORK. COORDINATE AND SCHEDULE ALL WORK WITH AND BETWEEN ALL CONTRACTORS AND PROVIDE ALL SUBCONTRACTORS WITH A COMPLETE SET OF BID DOCUMENTS. FIELD VERIFY AND COORDINATE WORK BETWEEN ALL TRADES, LANDLORD REQUIREMENTS, CEILING HEIGHTS AND EXISTING CONDITIONS PRIOR TO THE START OF WORK OR ORDERING OF EQUIPMENT.
3. VERIFY ALL CONDITIONS IN FIELD PRIOR TO BID. VISIT JOB SITE AND BE FAMILIAR WITH LANDLORD REQUIREMENTS AND EXISTING CONDITIONS. NO ALLOWANCE WILL BE MADE FOR EXTRAS DUE TO FAILURE TO VISIT THE JOB SITE AND/OR FAILURE TO PREDETERMINE ALL REQUIREMENTS IMPOSED BY THE LANDLORD, EXISTING CONDITIONS OR OTHER AUTHORITIES. REFER TO RESPONSIBILITY SCHEDULE ON SHEET G1.2 FOR MORE INFORMATION.
4. VERIFY DUCT ROUTING AS EARLY IN THE JOB PROCESS AS POSSIBLE. IF MINOR CHANGES ARE REQUIRED, NOTIFY TENANT CONSTRUCTION MANAGER IMMEDIATELY. DUCT DIMENSIONS ARE NOMINAL CLEAR INSIDE DIMENSIONS. DUCT LAYOUTS ARE SCHEMATIC. FIELD COORDINATE ALL DUCT RUNS PRIOR TO DUCT FABRICATION. NO EXTRAS SHALL BE AWARDED FOR DUCT REVISIONS CAUSED BY LACK OF COORDINATION. ALL RECTANGULAR DUCTWORK SHALL BE LINED AND ALL ROUND DUCT SHALL BE WRAPPED WITH A MINIMUM R-VALUE OF 4.2, 1.0 PCF INSULATION. REFER TO SPECIFICATIONS FOR MORE INFO.
5. ALIGNMENT/PLACEMENT OF HVAC DEVICES IS CRITICAL. COORDINATE ALIGNMENT WITH THE ARCHITECTURAL REFLECTED CEILING PLAN AND LIGHTING PLAN. COORDINATE BOX-OUT LOCATIONS FOR ALL DRYWALL MOUNTED AIR DEVICES WITH CEILING FRAMING. ORIENT ALL AIR DEVICES TO MINIMIZE VIEW INTO PLENUM/DUCT. CEILING AIR DEVICES TO HAVE BLADE OPENINGS FACING WALL OR SOFFIT AND WALL AIR DEVICES TO HAVE OPENINGS FACING UP.
6. SPIN-IN FITTINGS WITHOUT MANUAL BALANCING DAMPERS TO BE USED FOR ALL ROUND BRANCH TAPS AT INACCESSIBLE LOCATIONS WITH BALANCING REQUIRED WITHIN TWO (2) FEET OF DIFFUSER WITH PLASTER FRAME. FLEX DUCT TO BE A MAXIMUM OF 5'-0" LONG AND SHALL BE INSULATED.
7. PROVIDE AS-BUILT DRAWINGS ALONG WITH ALL EQUIPMENT SHOP DRAWINGS, INFORMATION ON THERMOSTATS, CONTROL WIRING DIAGRAMS AND OTHER PERTINENT INFORMATION TO LANDLORD AND TENANT AT COMPLETION OF PROJECT.
8. FURNISH AND INSTALL STRUCTURAL STEEL REQUIRED TO SUPPORT EQUIPMENT AND COORDINATE LOCATIONS AND REQUIREMENTS WITH THE LANDLORD REPRESENTATIVE. COST OF THIS WORK AND ANY STRUCTURAL ENGINEERING FEES REQUIRED SHALL BE INCLUDED IN THIS BID.
9. ALL EQUIPMENT, PIPING AND/OR DUCTWORK NOT BEING USED OR SHOWN TO REMAIN IS FULLY REMOVED AND NOT ABANDONED. REFER TO SPECIFICATIONS FOR ADDITIONAL INFORMATION.
10. ANY EXISTING WALL, FLOOR OR CEILING SURFACE THAT IS DAMAGED DURING CONSTRUCTION SHALL BE REPAIRED TO MATCH NEW AND/OR EXISTING CONDITIONS.
11. COMPLETELY INSTALL ALL ACCESSORIES PER EQUIPMENT MANUFACTURER RECOMMENDATIONS, INCLUDING ALL TEMPERATURE CONTROL CONNECTIONS. PROVIDE ALL MISCELLANEOUS MATERIALS AND LABOR REQUIRED TO COMPLETE THIS WORK PER MANUFACTURER PROVIDED INSTRUCTIONS.
12. GENERAL CONTRACTOR SHALL USE CERTIFIED NATIONAL AIR BALANCING CONTRACTOR. BALANCE ALL HVAC SYSTEMS TO AIRFLOW VALUES (CFM) NOTED ON PLANS AND PROVIDE AIR BALANCING REPORT TO TENANT FOR ALL HVAC SYSTEMS. CAREFULLY FOLLOW SPECIFICATIONS FOR AIR BALANCE WORK. GENERAL CONTRACTOR SHALL FIELD VERIFY AND COORDINATE REQUIREMENTS PRIOR TO BID AND INCLUDE THE COST OF THIS WORK IN THIS BID.
13. FURNISH AND INSTALL ACCESS PANELS AS DIRECTED AND AS SPECIFIED BY TENANT FOR ALL EQUIPMENT OR OTHER ITEMS REQUIRING ACCESS. VERIFY AND COORDINATE PLACEMENT OF ACCESS WITH EQUIPMENT SERVICE CLEARANCES AND WITH TENANT CONSTRUCTION MANAGER.
14. PRIOR TO MAKING ANY PIPE OR DUCT ROOF PENETRATIONS OR POSITIONING ANY EQUIPMENT ON THE ROOF, ALL PROPOSED LOCATIONS AND/OR PENETRATIONS SHALL MATCH LOCATIONS INDICATED ON THE LANDLORD APPROVED PLANS AND SHALL BE FIELD VERIFIED AND APPROVED BY LANDLORD FIELD REPRESENTATIVE.
15. ALL EQUIPMENT TO BE SUPPORTED FROM STRUCTURAL MEMBERS. NO WEIGHT CAN BE PLACED ON THE ROOFING MATERIALS OR INSULATION.
16. FURNISH AND INSTALL TEMPORARY WEATHERPROOFING OF ALL ROOF PENETRATIONS, UNTIL LANDLORD APPROVED ROOFING CONTRACTOR HAS MADE THE FINAL PATCH. VERIFY REQUIREMENTS WITH LANDLORD.
17. ALL ROOF CUTTING, PATCHING AND FLASHING REQUIRED SHALL BE BY A LANDLORD APPROVED ROOFING CONTRACTOR AT THIS CONTRACTOR'S EXPENSE. COORDINATE ROOF PENETRATIONS WITH LANDLORD'S REPRESENTATIVE. FIELD VERIFY AND COORDINATE REQUIREMENTS WITH LANDLORD PRIOR TO BID AND INCLUDE THE COST OF THIS WORK IN THIS BID.
18. ALL MECHANICAL EQUIPMENT, PIPES AND DUCTS, PENETRATING AND/OR LOCATED ON ROOF SHALL BE PAINTED TO MATCH COLOR OF ROOF. USE THE APPROPRIATE COATS OF PRIMER PRETREATMENT, PRIOR TO FINAL COAT. THE FINAL COAT OF THE ROOF MATCHING COLOR SHALL BE APPROVED BY LANDLORD CONSTRUCTION COORDINATOR. SPACE NUMBER SHALL BE PERMANENTLY MARKED ON ALL ROOF-MOUNTED EQUIPMENT.
19. EXISTING SPRINKLER HEAD TO REMAIN. VERIFY PROPER COVERAGE TO MEET CODE AND LOCAL AUTHORITY HAVING JURISDICTION.
20. PRIOR TO PERFORMING ANY SHUTDOWNS OR TESTING ON THE SPRINKLER OR FIRE ALARM THE GC SHALL COORDINATE WITH PROPERTY MANAGEMENT.
21. THE GC SHALL USE THE LANDLORD'S SPRINKLER AND FIRE ALARM CONTRACTOR TO PERFORM ANY REQUIRED WORK TO THE LANDLORD'S SYSTEMS AT THE TENANT'S GENERAL CONTRACTOR'S EXPENSE.

PROFESSIONAL CERTIFICATION. I HEREBY CERTIFY THAT THESE DOCUMENTS WERE PREPARED OR APPROVED BY ME, AND THAT I AM A DULY LICENSED PROFESSIONAL ENGINEER UNDER THE LAWS OF THE STATE OF MARYLAND, LICENSE NO. 32448, EXPIRATION DATE: 02-07-2020

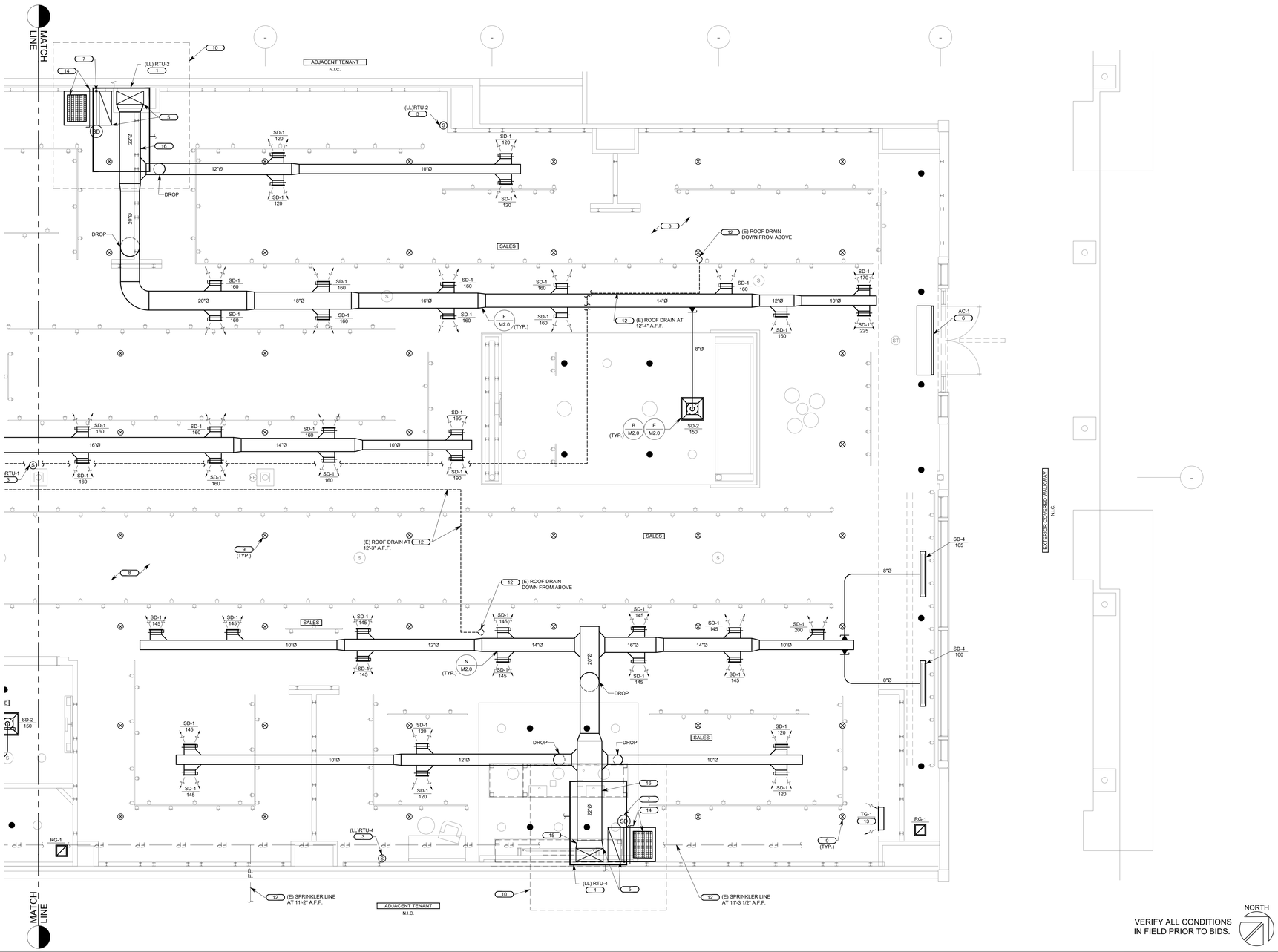

VERIFY ALL CONDITIONS IN FIELD PRIOR TO BIDS.

NORTH

MECHANICAL PLAN

1/4" = 1'-0"
-

E

MECHANICAL GENERAL NOTES

A

OWNER:

5A LANDS' END LANE
DODGEVILLE, WI 53595

ARCHITECT / ENGINEER:

SHREMSHOCK
Shremshock Engineering, Inc.
7400 W. Campus Rd. Suite 150 New Albany, OH 43054
t: 614 545 4550 | f: 614 545 4555 | shremshock.com

©2019 THE ARCHITECT / ENGINEER ASSUMES NO RESPONSIBILITY FOR THE USE OF THESE PLANS FOR ANY PROJECT OTHER THAN SPECIFICALLY AUTHORIZED BY THEM AND SIGNED AND SEALED FOR SUCH SPECIFIC LOCATION IN THE STATE, PROVINCE OR TERRITORY SHOWN ON THE SEAL. THIS BUILDING USE IS ONLY APPLICABLE IN AREAS MEETING THE STATED DESIGN CRITERIA.

LANDS' END

STORE NO:
TBD

PROJECT LOCATION:
CONGRESSIONAL PLAZA
1667 ROCKVILLE PIKE
SPACE #06
ROCKVILLE, MD 20852

DESIGN TYPE:
-

REVISIONS:

REQUIRED BY:		DATE
1	KLM: CLIENT, LANDLORD & B.D. COMMENTS	07/19/2019

* INDICATES NO REVISION TO THIS SHEET

MECHANICAL PLAN AND NOTES

DRAWN BY: JB CHECKED BY: JAE

DATE ISSUED: 06/07/2019
PROJECT NO: 190148

DRAWING NO:
M1.0

NOT USED

M

HVAC LEGEND AND ABBREVIATIONS

N.T.S.
-

H

THERMOSTAT	
SENSOR	
CARBON DIOXIDE SENSOR	
DUCT SMOKE DETECTOR	
UNDERCUT DOOR	
DUCT OFFSET	
SUPPLY DUCT - UP	
SUPPLY DUCT - DN	
RA OR EXH. DUCT UP	
RA OR EXH. DUCT DN	
ELBOW TURNING VANES	
FIRE DAMPER (F DPR)	
MANUAL BALANCE DPR	
TRANSITION	
DUCTWORK	
(E) DUCTWORK	
COND PIPE	
HYDRONIC PIPE	
(E) HYDRONIC PIPE	
(E) WATER PIPE	
(E) SANITARY PIPE	
FP — SPRINKLER PIPE	
UPRIGHT SPRINKLER HEAD	
CONCEALED SPRINKLER HEAD	
EXISTING SPRINKLER HEAD	
CONNECT TO EXISTING	
SUPPLY DIFFUSER	
RETURN GRILLE	
EXHAUST GRILLE/FAN	
ACCESS DOOR	
SPIN-IN FITTING	
SPIN-IN FITTING W/ MANUAL BALANCE DPR	
FLEX DUCT CONNECTION	

(E)EX.	EXISTING
(R)	RELOCATED
X"Ø	ROUND DUCT
AB	ABOVE
ACCU	AIR-COOLED CONDENSING UNIT
AD	ACCESS DOOR
AFF	ABOVE FINISHED FLOOR
AHU	AIR HANDLING UNIT
ARCH	ARCHITECT
BDD	BACKDRAFT DAMPER
BEL	BELOW
BLDG	BUILDING
CFM	CUBIC FEET PER MINUTE
CLG	CEILING
COND	CONDENSATE
CONT	CONTINUATION
CONTR	CONTRACTOR
COORD	COORDINATE
CS	CONDENSER WATER SUPPLY
CR	CONDENSER WATER RETURN
CWS	CHILLED WATER SUPPLY
CWR	CHILLED WATER RETURN
DCW	DOMESTIC COLD WATER
DIFF	DIFFUSER
DISC	DISCONNECT
DN	DOWN
DPR	DAMPER
EA	EACH
EXH	EXHAUST
F DPR	FIRE DAMPER
FLEX	FLEXIBLE
FLR	FLOOR
GC	GENERAL CONTRACTOR
HP	HORSEPOWER
MAX	MAXIMUM
MCA	MIN CIRCUIT AMPACITY
MIN	MINIMUM
MTD	MOUNTED
NTS	NOT TO SCALE
OA	OUTSIDE AIR
RA	RETURN AIR
RTU	ROOFTOP UNIT
SA	SUPPLY AIR
TV	TURNING VANES
TYP	TYPICAL
WSHP	WATER-SOURCE HEAT PUMP
W/	WITH

1. (LL)RTU-1,2,3&4: LANDLORD TO INSTALL NEW ELECTRIC COOLING/GAS HEAT ROOFTOP UNIT. GENERAL CONTRACTOR SHALL FURNISH AND INSTALL THREE SETS OF FILTERS. CHANGE FILTERS AFTER FINAL STORE CLEANING AND AGAIN PRIOR TO AIR BALANCE. REBALANCE FAN. RE-LABEL ROOFTOP UNIT PER LANDLORD REQUIREMENTS AND PER SPECIFICATIONS. FIELD VERIFY EXACT LOCATION AND ALL REQUIREMENTS.
2. GENERAL CONTRACTOR SHALL INSTALL A HONEYWELL ADJUSTABLE PROGRAMMABLE THERMOSTAT. SEE M2.0 FOR MODEL NUMBER. THERMOSTAT SHALL INCLUDE REMOTE SENSOR CAPABILITIES. GENERAL CONTRACTOR TO FURNISH AND INSTALL PLENUM RATED CONTROL WIRING BETWEEN HVAC UNIT AND THERMOSTAT. PROVIDE ALL MANUALS AND INSTRUCTIONS TO THE STORE MANAGER (INSTRUCT THE STORE MANAGER ON OPERATION UPON TURNOVER) AND THE PROJECT MANAGER (FOR THE CLOSEOUT PACKAGE). SPACE TEMPERATURE SETPOINT - UNOCCUPIED SETPOINTS SHALL BE 78°F COOLING AND 60°F HEATING. WARM-UP/OCCUPIED SETPOINTS SHALL BE 72°F COOLING AND 68°F HEATING. SETPOINTS SHALL BE LOCKED OUT TO PREVENT ADJUSTMENT MORE THAN 3°F UP OR DOWN FROM DEFAULT.
3. GENERAL CONTRACTOR SHALL INSTALL A HONEYWELL REMOTE SENSOR FOR EACH THERMOSTAT WHERE INDICATED. SEE M2.0 FOR MODEL NUMBER GENERAL CONTRACTOR TO FURNISH AND INSTALL PLENUM RATED CONTROL WIRING FROM REMOTE SENSOR TO THERMOSTAT AND CONNECT PER MANUFACTURER'S INSTRUCTIONS.
4. (E)EF: GENERAL CONTRACTOR SHALL REUSE EXISTING TOILET EXHAUST FAN IN EXISTING RESTROOM. CLEAN AND ADJUST AS REQUIRED FOR PROPER OPERATION. REPLACE/REPAIR ANY DEFECTIVE PARTS. FIELD VERIFY EXACT LOCATION AND ALL REQUIREMENTS.
5. SUPPLY AND RETURN AIR DUCTS SHALL BE MADE FULL SIZE OF EQUIPMENT OPENING AND SECURELY CONNECTED TO UNIT WITH FLEXIBLE DUCT CONNECTIONS. TRANSITION TO SIZE INDICATED ON PLANS IN THE VERTICAL DROP FROM THE UNIT AS REQUIRED.
6. AC-1: GENERAL CONTRACTOR TO PROVIDE AIR CURTAIN. AIR CURTAIN TO BE MOUNTED BELOW CEILING AND ABOVE DOOR. BOTTOM OF AIR CURTAIN TO BE NO MORE THAN 10'-0" A.F.F. SEE AIR CURTAIN SCHEDULE ON SHEET M2.1 FOR ADDITIONAL INFORMATION. REFER TO ELECTRICAL SHEETS FOR SPEED SWITCH/HEAT SWITCH AND DOOR CONTACT INFORMATION. SEE ARCHITECTURAL SHEETS A-81.00 AND A-82.00 FOR ADDITIONAL INFORMATION.
7. SMOKE DETECTOR FURNISHED AND INSTALLED BY GENERAL CONTRACTOR IN RETURN AIR PATH. UPON DETECTION OF SMOKE, DETECTOR SHALL SIGNAL LANDLORD FIRE ALARM SYSTEM AND UNIT SHALL SHUT DOWN. FIELD VERIFY AND COORDINATE ALL REQUIREMENTS WITH LANDLORD PRIOR TO BID AND INCLUDE ALL MATERIAL AND LABOR COSTS FOR THIS WORK IN BID.
8. REUSE AS MUCH AS POSSIBLE FROM THE EXISTING SPRINKLER SYSTEM AND ALARM SYSTEM. MODIFY SYSTEM AS REQUIRED TO MEET CODE. FIELD COORDINATE ALL REQUIREMENTS WITH LANDLORD, EXISTING CONDITIONS AND AUTHORITY HAVING JURISDICTION.
9. SPRINKLER HEADS SHOWN FOR REFERENCE ONLY. LICENSED FIRE PROTECTION PROFESSIONAL TO DETERMINE ACTUAL AMOUNT AND LOCATION OF HEADS. ALIGN SPRINKLER HEAD LOCATIONS WITH LIGHTS AND OTHER CEILING ELEMENTS. COORDINATE WITH LANDLORD AND TENANT.
10. DASHED LINE REPRESENTS THE MANUFACTURER'S RECOMMENDED CLEARANCE.
11. GENERAL CONTRACTOR SHALL VERIFY EXISTING DOOR IS UNDERCUT 1" FOR MAKE-UP AIR OR SHALL COORDINATE TO UNDERCUT EXISTING DOOR 1" AS REQUIRED. NEW DOOR TO BE UNDERCUT 1" FOR MAKE-UP AIR. FIELD VERIFY EXACT LOCATION AND ALL REQUIREMENTS.
12. EXISTING UTILITIES (DUCTWORK, PIPING, CONDUIT, ETC.) TO REMAIN. WHERE KNOWN, TYPE AND ELEVATION ARE AS NOTED. FIELD VERIFY EXACT SIZE, LOCATION, ELEVATION AND ALL OTHER REQUIREMENTS PRIOR TO BID.
13. TRANSFER GRILLE TO BE MOUNTED AS HIGH AS POSSIBLE. IN AREAS WHERE THERE IS A CEILING; MOUNT TRANSFER GRILLE ABOVE CEILING. TRANSFER GRILLES VISIBLE IN SALES AREA SHALL ALL BE MOUNTED AT THE SAME HEIGHT AS EACH OTHER.
14. FURNISH AND INSTALL A 1"X1" ALUMINUM WIRE MESH SCREEN OVER RETURN AIR OPENING IN TOP OF DUCT WITH END OF DUCT CAPPED. 20"X28" OPENING FOR (LL)RTU-1,2,3&4 AND BALANCE MANUAL DAMPER TO 2,150 CFM.
15. GENERAL CONTRACTOR TO INSTALL DUCT ABOVE SPRINKLER LINE. IF NOT POSSIBLE, GENERAL CONTRACTOR TO CONTACT ENGINEER OF RECORD.
16. DUCT TO BE RUN INBETWEEN JOIST AS HIGH AS POSSIBLE. DROP DOWN TO RUN BENEATH JOISTS AS SHOWN. DUCT TRANSITIONS TO HAVE TOP OF DUCT TIGHT TO STRUCTURE TO ALLOW FOR DUCT HEIGHT TO BE AS HIGH AS POSSIBLE.
17. FURNISH AND INSTALL FIRE DAMPERS AS SHOWN WITH ACCESS PANELS IN DUCT FOR RESET OF FIRE DAMPERS. FIELD VERIFY AND COORDINATE ALL REQUIREMENTS WITH LANDLORD. LABEL PER CODE REQUIREMENTS.

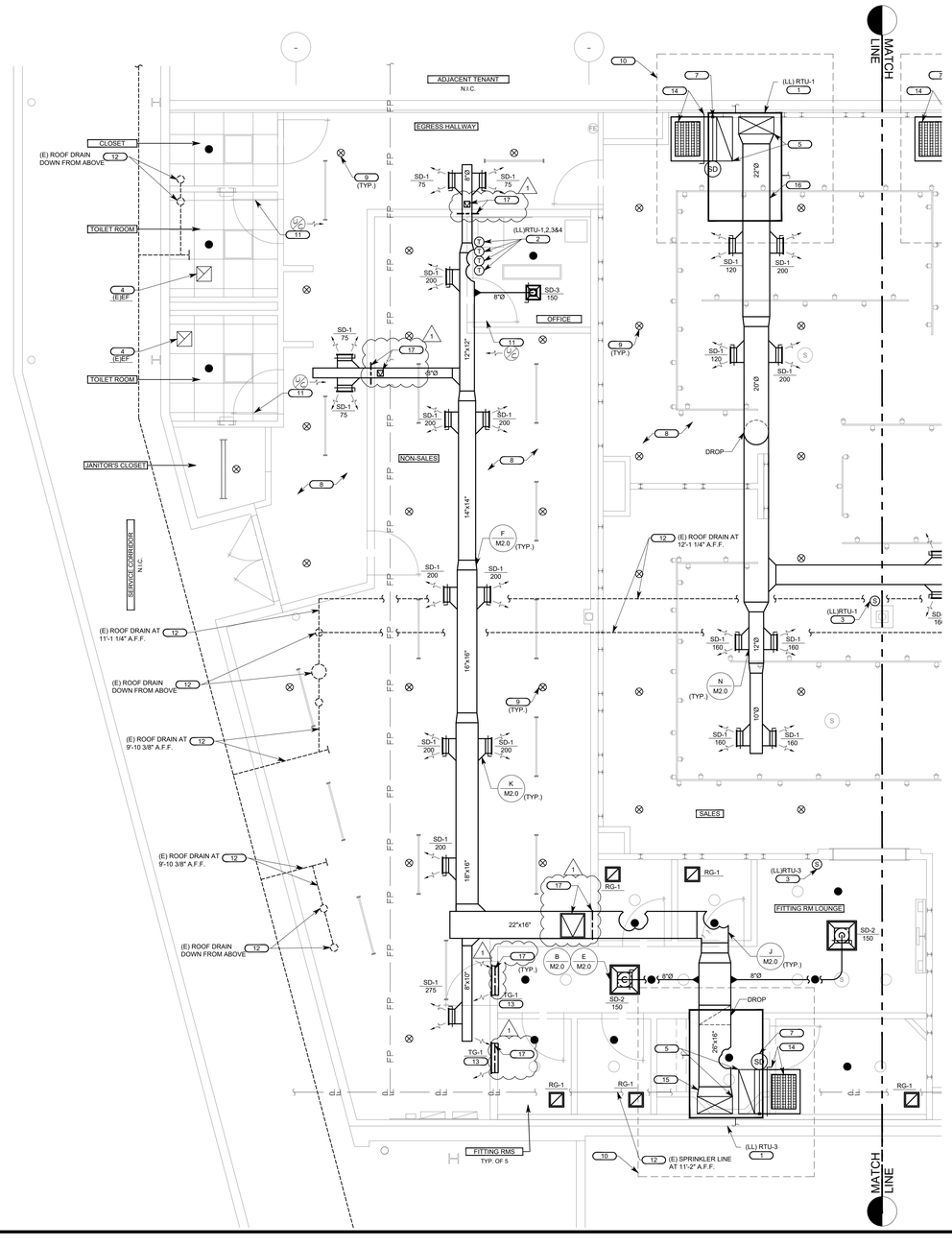

VERIFY ALL CONDITIONS IN FIELD PRIOR TO BIDS.

NORTH

MECHANICAL PLAN

1/4" = 1'-0"
-

E

MECHANICAL CODED NOTES

C

1. PROVIDE ALL LABOR, MATERIALS, EQUIPMENT, SERVICES, TOOLS, TRANSPORTATION, INCIDENTALS AND DETAILS NECESSARY TO PROVIDE A COMPLETE AND FULLY OPERATIONAL MECHANICAL SYSTEM AS SHOWN ON THE DRAWINGS, CALLED FOR IN THE SPECIFICATIONS AND AS REQUIRED BY THE JOB CONDITIONS. ALL WORK NOT SPECIFICALLY NOTED AS BEING PROVIDED BY THE LANDLORD SHALL BE PROVIDED BY THE GENERAL CONTRACTOR. ALL WORK (MATERIALS, FABRICATION, INSTALLATION, ETC.) SHALL COMPLY WITH THE APPLICABLE SECTIONS OF ALL STATE AND LOCAL CODES (MECHANICAL CODE, BUILDING CODE, ENERGY CODE, ETC.) AND THE LATEST EDITION OF SMACNA.
2. READ THE SPECIFICATIONS AND REVIEW DRAWINGS FOR ALL DIVISIONS OF WORK. COORDINATE AND SCHEDULE ALL WORK WITH AND BETWEEN ALL CONTRACTORS AND PROVIDE ALL SUBCONTRACTORS WITH A COMPLETE SET OF BID DOCUMENTS. FIELD VERIFY AND COORDINATE WORK BETWEEN ALL TRADES, LANDLORD REQUIREMENTS, CEILING HEIGHTS AND EXISTING CONDITIONS PRIOR TO THE START OF WORK OR ORDERING OF EQUIPMENT.
3. VERIFY ALL CONDITIONS IN FIELD PRIOR TO BID. VISIT JOB SITE AND BE FAMILIAR WITH LANDLORD REQUIREMENTS AND EXISTING CONDITIONS. NO ALLOWANCE WILL BE MADE FOR EXTRAS DUE TO FAILURE TO VISIT THE JOB SITE AND/OR FAILURE TO PREDETERMINE ALL REQUIREMENTS IMPOSED BY THE LANDLORD, EXISTING CONDITIONS OR OTHER AUTHORITIES. REFER TO RESPONSIBILITY SCHEDULE ON SHEET G1.2 FOR MORE INFORMATION.
4. VERIFY DUCT ROUTING AS EARLY IN THE JOB PROCESS AS POSSIBLE. IF MINOR CHANGES ARE REQUIRED, NOTIFY TENANT CONSTRUCTION MANAGER IMMEDIATELY. DUCT DIMENSIONS ARE NOMINAL CLEAR INSIDE DIMENSIONS. DUCT LAYOUTS ARE SCHEMATIC. FIELD COORDINATE ALL DUCT RUNS PRIOR TO DUCT FABRICATION. NO EXTRAS SHALL BE AWARDED FOR DUCT REVISIONS CAUSED BY LACK OF COORDINATION. ALL RECTANGULAR DUCTWORK SHALL BE LINED AND ALL ROUND DUCT SHALL BE WRAPPED WITH A MINIMUM R-VALUE OF 4.2, 1.0 PCF INSULATION. REFER TO SPECIFICATIONS FOR MORE INFO.
5. ALIGNMENT/PLACEMENT OF HVAC DEVICES IS CRITICAL. COORDINATE ALIGNMENT WITH THE ARCHITECTURAL REFLECTED CEILING PLAN AND LIGHTING PLAN. COORDINATE BOX-OUT LOCATIONS FOR ALL DRYWALL MOUNTED AIR DEVICES WITH CEILING FRAMING. ORIENT ALL AIR DEVICES TO MINIMIZE VIEW INTO PLENUM/DUCT. CEILING AIR DEVICES TO HAVE BLADE OPENINGS FACING WALL OR SOFFIT AND WALL AIR DEVICES TO HAVE OPENINGS FACING UP.
6. SPIN-IN FITTINGS WITHOUT MANUAL BALANCING DAMPERS TO BE USED FOR ALL ROUND BRANCH TAPS AT INACCESSIBLE LOCATIONS WITH BALANCING REQUIRED WITHIN TWO (2) FEET OF DIFFUSER WITH PLASTER FRAME. FLEX DUCT TO BE A MAXIMUM OF 5'-0" LONG AND SHALL BE INSULATED.
7. PROVIDE AS-BUILT DRAWINGS ALONG WITH ALL EQUIPMENT SHOP DRAWINGS, INFORMATION ON THERMOSTATS, CONTROL WIRING DIAGRAMS AND OTHER PERTINENT INFORMATION TO LANDLORD AND TENANT AT COMPLETION OF PROJECT.
8. FURNISH AND INSTALL STRUCTURAL STEEL REQUIRED TO SUPPORT EQUIPMENT AND COORDINATE LOCATIONS AND REQUIREMENTS WITH THE LANDLORD REPRESENTATIVE. COST OF THIS WORK AND ANY STRUCTURAL ENGINEERING FEES REQUIRED SHALL BE INCLUDED IN THIS BID.
9. ALL EQUIPMENT, PIPING AND/OR DUCTWORK NOT BEING USED OR SHOWN TO REMAIN IS FULLY REMOVED AND NOT ABANDONED. REFER TO SPECIFICATIONS FOR ADDITIONAL INFORMATION.
10. ANY EXISTING WALL, FLOOR OR CEILING SURFACE THAT IS DAMAGED DURING CONSTRUCTION SHALL BE REPAIRED TO MATCH NEW AND/OR EXISTING CONDITIONS.
11. COMPLETELY INSTALL ALL ACCESSORIES PER EQUIPMENT MANUFACTURER RECOMMENDATIONS, INCLUDING ALL TEMPERATURE CONTROL CONNECTIONS. PROVIDE ALL MISCELLANEOUS MATERIALS AND LABOR REQUIRED TO COMPLETE THIS WORK PER MANUFACTURER PROVIDED INSTRUCTIONS.
12. GENERAL CONTRACTOR SHALL USE CERTIFIED NATIONAL AIR BALANCING CONTRACTOR. BALANCE ALL HVAC SYSTEMS TO AIRFLOW VALUES (CFM) NOTED ON PLANS AND PROVIDE AIR BALANCING REPORT TO TENANT FOR ALL HVAC SYSTEMS. CAREFULLY FOLLOW SPECIFICATIONS FOR AIR BALANCE WORK. GENERAL CONTRACTOR SHALL FIELD VERIFY AND COORDINATE REQUIREMENTS PRIOR TO BID AND INCLUDE THE COST OF THIS WORK IN THIS BID.
13. FURNISH AND INSTALL ACCESS PANELS AS DIRECTED AND AS SPECIFIED BY TENANT FOR ALL EQUIPMENT OR OTHER ITEMS REQUIRING ACCESS. VERIFY AND COORDINATE PLACEMENT OF ACCESS WITH EQUIPMENT SERVICE CLEARANCES AND WITH TENANT CONSTRUCTION MANAGER.
14. PRIOR TO MAKING ANY PIPE OR DUCT ROOF PENETRATIONS OR POSITIONING ANY EQUIPMENT ON THE ROOF, ALL PROPOSED LOCATIONS AND/OR PENETRATIONS SHALL MATCH LOCATIONS INDICATED ON THE LANDLORD APPROVED PLANS AND SHALL BE FIELD VERIFIED AND APPROVED BY LANDLORD FIELD REPRESENTATIVE.
15. ALL EQUIPMENT TO BE SUPPORTED FROM STRUCTURAL MEMBERS. NO WEIGHT CAN BE PLACED ON THE ROOFING MATERIALS OR INSULATION.
16. FURNISH AND INSTALL TEMPORARY WEATHERPROOFING OF ALL ROOF PENETRATIONS, UNTIL LANDLORD APPROVED ROOFING CONTRACTOR HAS MADE THE FINAL PATCH. VERIFY REQUIREMENTS WITH LANDLORD.
17. ALL ROOF CUTTING, PATCHING AND FLASHING REQUIRED SHALL BE BY A LANDLORD APPROVED ROOFING CONTRACTOR AT THIS CONTRACTOR'S EXPENSE. COORDINATE ROOF PENETRATIONS WITH LANDLORD'S REPRESENTATIVE. FIELD VERIFY AND COORDINATE REQUIREMENTS WITH LANDLORD PRIOR TO BID AND INCLUDE THE COST OF THIS WORK IN THIS BID.
18. ALL MECHANICAL EQUIPMENT, PIPES AND DUCTS, PENETRATING AND/OR LOCATED ON ROOF SHALL BE PAINTED TO MATCH COLOR OF ROOF. USE THE APPROPRIATE COATS OF PRIMER PRETREATMENT, PRIOR TO FINAL COAT. THE FINAL COAT OF THE ROOF MATCHING COLOR SHALL BE APPROVED BY LANDLORD CONSTRUCTION COORDINATOR. SPACE NUMBER SHALL BE PERMANENTLY MARKED ON ALL ROOF-MOUNTED EQUIPMENT.
19. EXISTING SPRINKLER HEAD TO REMAIN. VERIFY PROPER COVERAGE TO MEET CODE AND LOCAL AUTHORITY HAVING JURISDICTION.
20. PRIOR TO PERFORMING ANY SHUTDOWNS OR TESTING ON THE SPRINKLER OR FIRE ALARM THE GC SHALL COORDINATE WITH PROPERTY MANAGEMENT.
21. THE GC SHALL USE THE LANDLORD'S SPRINKLER AND FIRE ALARM CONTRACTOR TO PERFORM ANY REQUIRED WORK TO THE LANDLORD'S SYSTEMS AT THE TENANT'S GENERAL CONTRACTOR'S EXPENSE.

PROFESSIONAL CERTIFICATION. I HEREBY CERTIFY THAT THESE DOCUMENTS WERE PREPARED OR APPROVED BY ME, AND THAT I AM A DULY LICENSED PROFESSIONAL ENGINEER UNDER THE LAWS OF THE STATE OF MARYLAND, LICENSE NO. 32448, EXPIRATION DATE: 02-07-2020 .

MECHANICAL GENERAL NOTES

A

OWNER:

5A LANDS' END LANE
DODGEVILLE, WI 53595

ARCHITECT / ENGINEER:

SHREMSHOCK
Shremshock Engineering, Inc.
7400 W. Campus Rd. Suite 150 New Albany, OH 43054
t: 614 545 4550 | f: 614 545 4555 | shremshock.com

©2019 THE ARCHITECT / ENGINEER ASSUMES NO RESPONSIBILITY FOR THE USE OF THESE PLANS FOR ANY PROJECT OTHER THAN SPECIFICALLY AUTHORIZED BY THEM AND SIGNED AND SEALED FOR SUCH SPECIFIC LOCATION IN THE STATE, PROVINCE OR TERRITORY SHOWN ON THE SEAL. THIS BUILDING USE IS ONLY APPLICABLE IN AREAS MEETING THE STATED DESIGN CRITERIA.

LANDS' END

STORE NO:
TBD

PROJECT LOCATION:
CONGRESSIONAL PLAZA
1667 ROCKVILLE PIKE
SPACE #06
ROCKVILLE, MD 20852

DESIGN TYPE:
-

REVISIONS:

REQUIRED BY:	DATE
1 KLM CLIENT, LANDLORD & B.D. COMMENTS	07/19/2019

* INDICATES NO REVISION TO THIS SHEET

MECHANICAL PLAN AND NOTES

DRAWN BY: JB CHECKED BY: JAE

DATE ISSUED: 06/07/2019
PROJECT NO: 190148

DRAWING NO:
M1.1

DESIGN WEATHER PARAMETERS

Design Parameters:

City Name	Baltimore	
Location	Maryland	
Latitude	39.2	Deg.
Longitude	76.7	Deg.
Elevation	154.0	ft
Summer Design Dry-Bulb	93.0	°F
Summer Coincident Wet-Bulb	75.0	°F
Summer Daily Range	18.8	°F
Winter Design Dry-Bulb	11.0	°F
Winter Design Wet-Bulb	8.6	°F
Atmospheric Clearness Number	1.00	
Average Ground Reflectance	0.20	
Soil Conductivity	0.800	BTU/(hr·ft·°F)
Local Time Zone (GMT +/- N hours)	5.0	hours
Consider Daylight Savings Time	No	
Simulation Weather Data	N/A	
Current Data is	2001 ASHRAE Handbook	
Design Cooling Months	January to December	

Air System Information

Air System Name	RTU		Number of zones	1	
Equipment Class	PKG ROOF		Floor Area	8570.0	ft²
Air System Type	SZCAV		Location	Baltimore, Maryland	

Sizing Calculation Information

Calculation Months	Jan to Dec	Zone CFM Sizing	Sum of space airflow rates
Sizing Data	Calculated	Space CFM Sizing	Individual peak space loads

Central Cooling Coil Sizing Data

Total coil load	26.0	Tons	Load occurs at	Jul 1400	
Total coil load	312.2	MBH	OA DB / WB	92.4 / 74.8	°F
Sensible coil load	220.6	MBH	Entering DB / WB	76.2 / 65.6	°F
Coil CFM at Jul 1400	10500	CFM	Leaving DB / WB	56.7 / 55.7	°F
Max block CFM	10500	CFM	Coil ADP	54.5	°F
Sum of peak zone CFM	10500	CFM	Bypass Factor	0.100	
Sensible heat ratio	0.707		Resulting RH	60	%
CFM/Ton	403.6		Design supply temp.	58.0	°F
ft²/Ton	329.4		Zone T-stat Check	1 of 1	OK
BTU/(hr·ft²)	36.4		Max zone temperature deviation	0.0	°F
Water flow @ 10.0 °F rise	N/A				

Central Heating Coil Sizing Data

Max coil load	173.2	MBH	Load occurs at	Des Htg	
Coil CFM at Des Htg	10500	CFM	BTU/(hr·ft²)	20.2	
Max coil CFM	10500	CFM	Ent. DB / Lvg DB	57.6 / 73.0	°F
Water flow @ 20.0 °F drop	N/A				

Supply Fan Sizing Data

Actual max CFM	10500	CFM	Fan motor BHP	2.88	BHP
Standard CFM	10442	CFM	Fan motor kW	2.28	kW
Actual max CFM/ft²	1.23	CFM/ft²	Fan static	1.00	in wg

Outdoor Ventilation Air Data

Design airflow CFM	1900	CFM	CFM/person	8.05	CFM/person
CFM/ft²	0.22	CFM/ft²			

	DESIGN COOLING			DESIGN HEATING		
	COOLING DATA AT Jul 1400 COOLING OA DB / WB 92.4 °F / 74.8 °F			HEATING DATA AT DES HTG HEATING OA DB / WB 11.0 °F / 8.6 °F		
ZONE LOADS	Details	Sensible (BTU/hr)	Latent (BTU/hr)	Details	Sensible (BTU/hr)	Latent (BTU/hr)
Window & Skylight Solar Loads	245 ft²	11669	-	245 ft²	-	-
Wall Transmission	627 ft²	758	-	627 ft²	1952	-
Roof Transmission	8570 ft²	36412	-	8570 ft²	32054	-
Window Transmission	245 ft²	4981	-	245 ft²	15470	-
Skylight Transmission	0 ft²	0	-	0 ft²	0	-
Door Loads	64 ft²	2870	-	64 ft²	1940	-
Floor Transmission	8570 ft²	0	-	8570 ft²	3074	-
Partitions	0 ft²	0	-	0 ft²	0	-
Ceiling	0 ft²	0	-	0 ft²	0	-
Overhead Lighting	5790 W	16944	-	0	0	-
Task Lighting	0 W	0	-	0	0	-
Electric Equipment	4300 W	13946	-	0	0	-
People	236	42772	48380	0	0	0
Infiltration	-	0	0	-	0	0
Miscellaneous	-	0	0	-	0	0
Safety Factor	10% / 10%	13035	4838	10%	5449	0
>> Total Zone Loads	**-**	**143387**	**53218**	**-**	**59939**	**0**
Zone Conditioning	-	165322	53218	-	61828	0
Plenum Wall Load	0%	0	-	0	0	-
Plenum Roof Load	0%	0	-	0	0	-
Plenum Lighting Load	0%	0	-	0	0	-
Return Fan Load	10500 CFM	0	-	10500 CFM	0	-
Ventilation Load	1900 CFM	40355	38333	1900 CFM	116142	0
Supply Fan Load	10500 CFM	7784	-	10500 CFM	-7784	-
Space Fan Coil Fans	-	0	-	-	0	-
Duct Heat Gain / Loss	5%	7169	-	5%	2997	-
>> Total System Loads	**-**	**220630**	**91551**	**-**	**173183**	**0**
Central Cooling Coil	-	220630	91555	-	0	0
Central Heating Coil	-	0	-	-	173183	-
>> Total Conditioning	**-**	**220630**	**91555**	**-**	**173183**	**0**
Key:	Positive values are clg loads Negative values are htg loads			Positive values are htg loads Negative values are clg loads		

HVAC LOAD CALCULATIONS P

OUTSIDE AIR SCHEDULE

SPACE DESIGNATION	FLOOR AREA (SF)	SPACE OUTSIDE AIR REQUIREMENTS (IMC 2015) OCCUPANCY	CFM PER PERSON	CFM PER SF	MINIMUM CFM	SERVICE	OUTSIDE AIR (CFM)
SALES	6909	105	7.5	0.12	1615	(LL)RTU-1 THRU (LL)RTU-4	SEE ROOFTOP UNIT SCH.
NON-SALES	1662	1	-	0.12	200		
MINIMUM OUTSIDE AIR REQUIRED = 1815						MINIMUM OUTSIDE AIR DELIVERED = 1,900 CFM	

AIR CURTAIN SCHEDULE

MARK	AC-1		
MANUFACTURER	BERNER		
MODEL #	AHD10-2072E		
TYPE	SUSPENDED		
AIR FLOW (CFM)	2,770		
ELECTRICAL			
VOLTS/Ø/HZ	208 / 3 / 60		
HEATER KW	28		
MOTOR HP (QTY=2)	.5		
APPROX. WEIGHT (LBS.)	142		
SERVES	FRONT DOOR		
ACCESSORIES	1-2		
NOTES	1-3		

ACCESSORIES:
1. PROVIDE UNIT COMPLETE WITH ALL REQUIRED CONTROLS (THERMAL CUTOUTS, AIRFLOW SWITCH, MAGNETIC CONTACTS, CONTROL TRANSFORMER, DISCONNECT SWITCH, CONTROL ENCLOSURE)
2. PROVIDE MOUNTING HARDWARE AS REQUIRED.
3. PROVIDE NOZZLE EXTENTION. VERIFY REQUIRED LENGTH IN FIELD.

NOTES:
1. UNITS MUST BE AMCA RATED.
2. HUNG BELOW CEILING AND ABOVE TOP OF DOOR. BOTTOM OF UNIT TO BE NO MORE THAN 10'-0" A.F.F. REFER TO ARCHITECTURAL STOREFRONT DETAILS ON SHEETS A-82.00 FOR MOUNTING ELEVATION AND ADDITIONAL INFORMATION.
3. UNIT SHALL HAVE SINGLE POINT ELECTRICAL CONNECTION.

TITUS AIR DISTRIBUTION SCHEDULE

MARK	CATALOG NUMBER	SIZE MOD.	SIZE	MOUNTING CEILING	MOUNTING OTHER	MATERIAL STEEL	MATERIAL ALUM.	BORDER STYLE	NOTES
SD-1	TITUS 300RS	14"X10"	SEE PLAN		DUCT	●		A	
SD-2	TITUS OMNI	24"X24"	8"Ø	●		●		B	
SD-3	TITUS OMNI	12"X12"	8"Ø	●		●		B	
SD-4	TITUS ML-39	4'-0" 2-SLOT	6"OVAL	●		●		D	WITH MPI-3A PLENUM
RG-1	TITUS OMNI	12"X12"	10"X10"	●		●		B	
TG-1	TITUS 350 RL	24"X12"	22"X10"		WALL	●		A	

NOTES (APPLY TO ALL AIR DISTRIBUTION DEVICES):

SYMBOL KEY / MARK:
FIRST LETTER: S-SUPPLY R-RETURN E-EXHAUST
SECOND LETTER: D-DIFFUSER R-REGISTER G-GRILLE

CATALOG NUMBERS REFER TO TITUS AIR DEVICES.

PROVIDE DIRECTIONAL BLOW FOR AIRFLOW OTHER THAN 4-WAY. SEE DETAIL ON THIS SHEET.

SEE ARCHITECTURAL SHEETS FOR FINISH COLOR, IF NO COLOR IS SPECIFIED, PROVIDE STANDARD WHITE.

FOR ALL 300RS AND 355RL AIR DEVICES IN NON-SALES, DAMPERS ARE TO BE PROVIDED WITH MANUAL VOLUME DAMPER.

BORDER STYLE:
A. SURFACE MOUNTED.
B. LAY-IN - PROVIDE WITH TITUS MODEL #TRM-S FRAME FOR DRYWALL CEILING MOUNTING. SEE DETAIL ON THIS SHEET.
C. LAY-IN FRAME FOR T-BAR CEILING.
D. LAY-IN - PROVIDE WITH TITUS BORDER STYLE 22 FOR DRYWALL CEILING MOUNTING FOR LINEAR DEVICES.

LANDLORD ROOFTOP UNIT SCHEDULE - GAS

MARK	(LL)RTU-1,2,3&4		
MANUFACTURER	CARRIER		
MODEL #	48TCED08A2A5-0A0G0		
NOMINAL TONNAGE / EER	7.5 / 11		
SUPPLY AIR FLOW (CFM)	2,625		
OUTSIDE AIR FLOW (CFM)	475		
AMBIENT OAT (°FDB)	93		
EXT. S.P. (IN. W.C.)	0.8		
DX COOLING COIL			
EAT (°FBD/WB)	76.2 / 65.6		
TOTAL (MBH)	88.3		
SENSIBLE (MBH)	51.3		
NATURAL GAS HEAT			
INPUT (MBH)	180		
OUTPUT (MBH)	145		
ELECTRICAL			
VOLTS/Ø/HZ	208 / 3 / 60		
MOTOR (BHP)	-		
MCA (AMPS)	42		
MOCP (AMPS)	50		
MAX. WEIGHT (LBS.)	-		
ACCESSORIES	1,3,4-7,12		
NOTES	A,B,C,		

ACCESSORIES (LANDLORD PROVIDED):
1. FACTORY PROVIDED NON-FUSED DISCONNECT & THRU THE BASE ELEC.
2. FACTORY PROVIDED DUCT SMOKE DETECTOR IN RETURN AIR.
3. FACTORY FURNISHED (FIELD INSTALLED) 14" HIGH ROOF CURB.
4. FACTORY FURNISHED ENTHALPY ECONOMIZER, HOOD WITH BIRDSCREEN AND BAROMETRIC RELIEF (SOME FIELD ASSEMBLY REQUIRED).
5. FACTORY PROVIDED (FIELD WIRED) NON-POWERED GFI OUTLET.
6. FACTORY PROVIDED (FIELD INSTALLED) HONEYWELL PROGRAMMABLE REDLINK THERMOSTAT VISION PRO (MODEL # L46-667 TH8110R1008/U) AND REMOTE SENSOR (MODEL # L40-710 C7189U1005/U).
7. FACTORY PROVIDED HINGED ACCESS DOORS.
8. FACTORY FURNISHED (FIELD INSTALLED) HAIL GUARD.
9. FACTORY PROVIDED WITH COASTAL CONDENSER COIL COATING.
10. FACTORY FURNISHED POWER EXHAUST FOR RELIEF AIR (SOME FIELD ASSEMBLY REQUIRED).
11. FACTORY PROVIDED WITH HOT GAS REHEAT FOR DEHUMIDIFICATION.
12. FACTORY PROVIDED WITH 2" FILTER RACK.

NOTES:
A. WIRING OF CONTROLS TO BE BY GENERAL CONTRACTOR.
B. REFER TO CONTROL WIRING SCHEMATICS FOR ANY FIELD INSTALLED CONTROL DEVICES NOT FACTORY INSTALLED.
C. FIELD SET MINIMUM OUTSIDE AIR AS SPECIFIED ABOVE. OUTSIDE AIR DAMPER SHALL FULLY CLOSE ON UNIT SHUTDOWN.
D. UNIT PROVIDED BY GENERAL CONTRACTOR.
E. GENERAL CONTRACTOR TO PROVIDE ALL STRUCTURAL SUPPORT.

VERIFY ALL CONDITIONS IN FIELD PRIOR TO BIDS.

HVAC SCHEDULES C

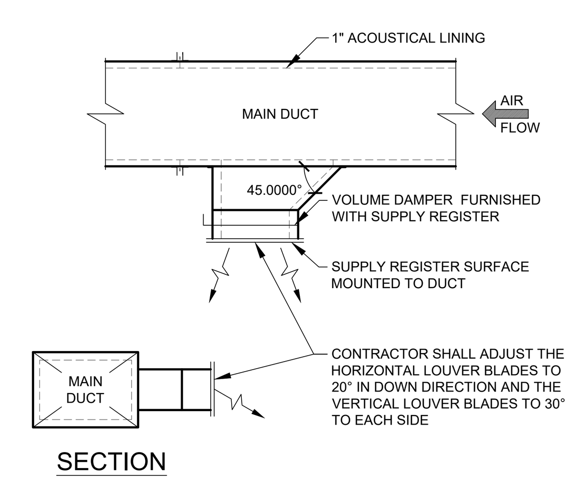

DIFFUSER ON SQUARE DUCT DETAIL K

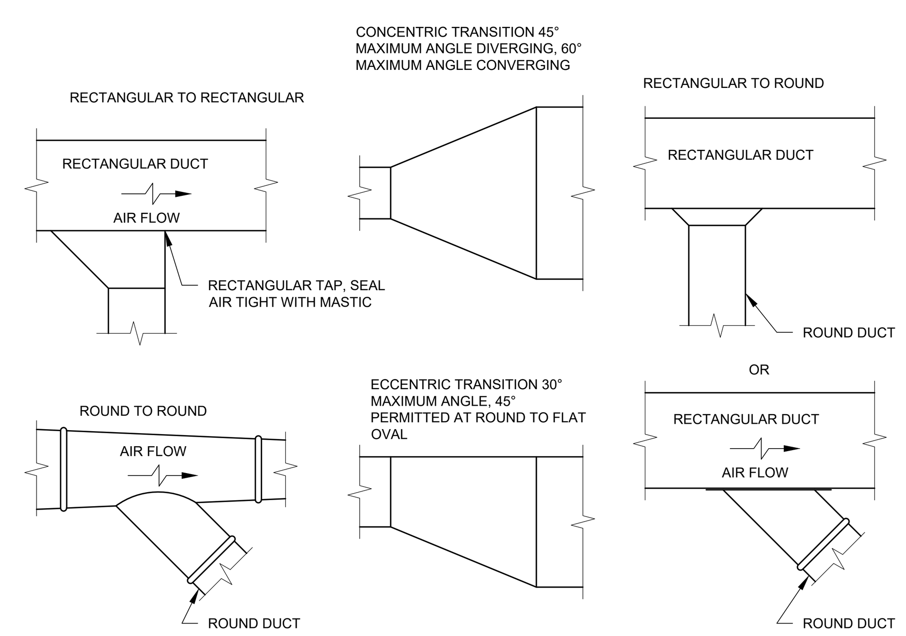

SEE SPECIFICATIONS FOR DUCTWORK FABRICATION, INSTALLATION AND INSULATION REQUIREMENTS

DUCT TRANSITION DETAIL N.T.S. - F

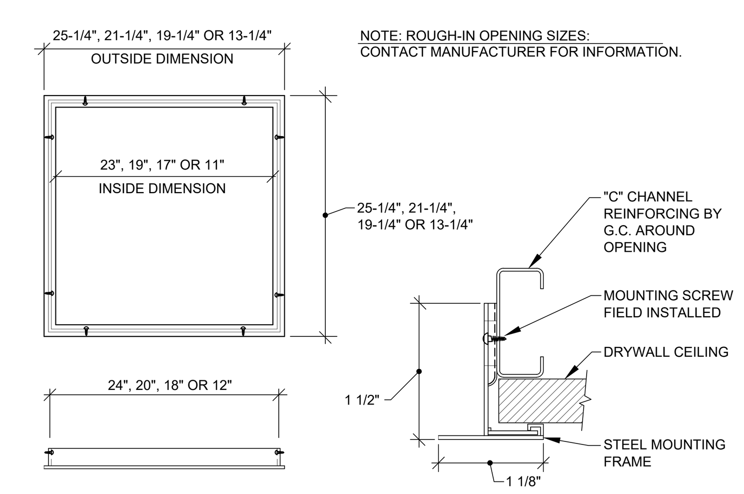

DRYWALL MOUNTING FRAME DETAIL N.T.S. - B

NOT USED T

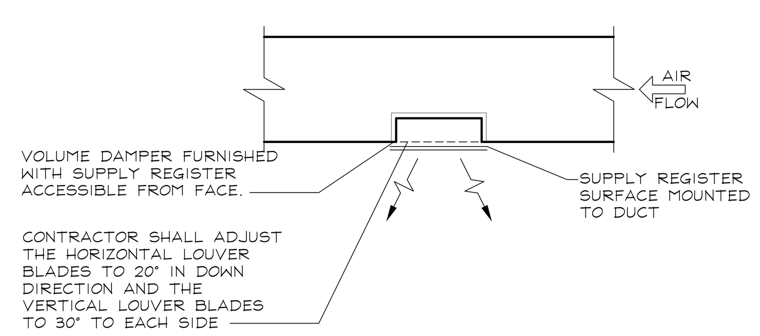

DUCT MOUNTED DIFFUSER DETAIL N.T.S. - N

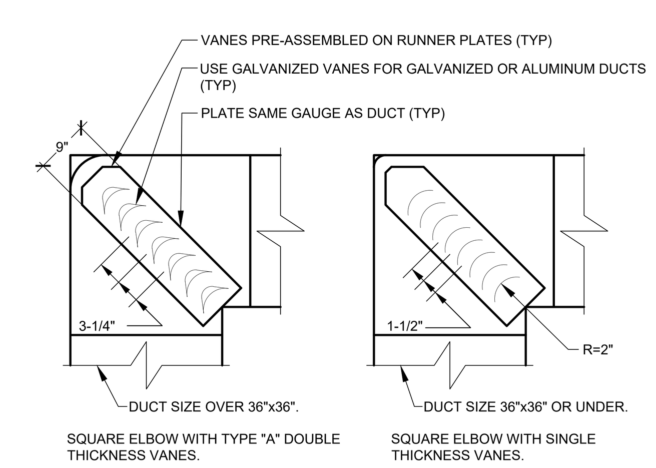

TURNING VANE DETAIL N.T.S. - J

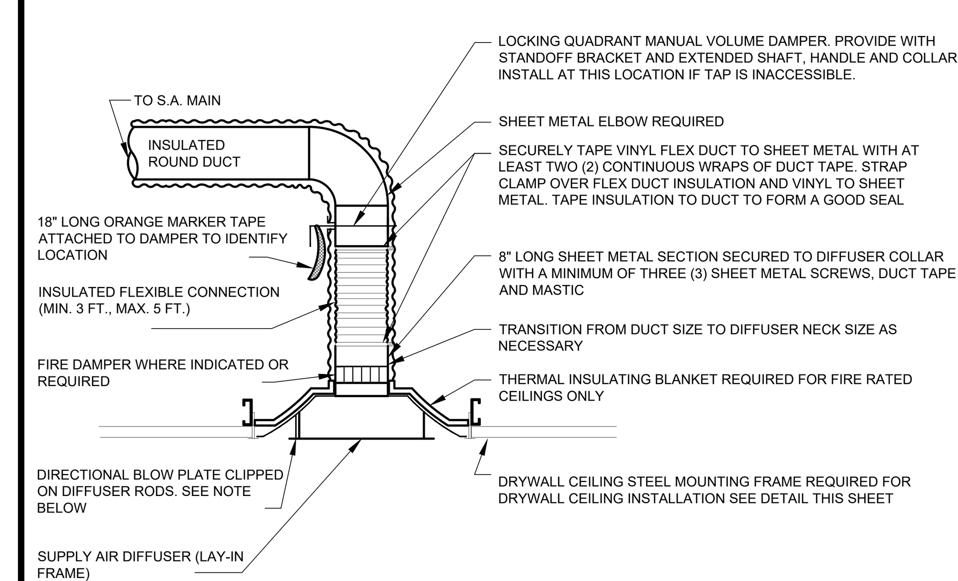

NOTE:
- ALL DIFFUSERS ARE 4-WAY BLOW UNLESS NOTED OTHERWISE. PROVIDE OPTIONAL DIRECTIONAL BLOW, TITUS MODEL "DB" TO CONVERT DIFFUSER FROM STANDARD 4-WAY TO 1-WAY, 2-WAY OR 3-WAY BLOW AS DESIGNATED ON PLANS BY SHADED AREA.
- IF DEVICE IS ADJUSTABLE BY FACE OMIT DAMPER HANDLE ABOVE CEILING AND MARKER TAPE. REFER TO AIR DISTRIBUTION SCHEDULE. VERIFY ALL REQUIREMENTS.

DIFFUSER MOUNTING DETAIL N.T.S. - E

PROFESSIONAL CERTIFICATION. I HEREBY CERTIFY THAT THESE DOCUMENTS WERE PREPARED OR APPROVED BY ME, AND THAT I AM A DULY LICENSED PROFESSIONAL ENGINEER UNDER THE LAWS OF THE STATE OF MARYLAND, LICENSE NO. 32448, EXPIRATION DATE: 02-07-2020 .

NOT USED A

OWNER:
5A LANDS' END LANE
DODGEVILLE, WI 53595

ARCHITECT / ENGINEER:
SHREMSHOCK
Shremshock Engineering, Inc.
7400 W. Campus Rd. Suite 150 New Albany, OH 43054
t: 614 545 4550 | f: 614 545 4555 | shremshock.com

©2019 THE ARCHITECT / ENGINEER ASSUMES NO RESPONSIBILITY OR LIABILITY FOR THE USE OF THESE PLANS FOR ANY PROJECT OTHER THAN SPECIFICALLY AUTHORIZED BY THEM AND SIGNED AND SEALED FOR SUCH SPECIFIC LOCATION IN THE STATE, PROVINCE OR TERRITORY SHOWN ON THE SEAL. THIS BUILDING USE IS ONLY APPLICABLE IN AREAS MEETING THE STATED DESIGN CRITERIA.

LANDS' END

STORE NO: TBD

PROJECT LOCATION:
CONGRESSIONAL PLAZA
1667 ROCKVILLE PIKE
SPACE #06
ROCKVILLE, MD 20852

DESIGN TYPE: -

REVISIONS:

REQUIRED BY:		DATE
1	CLIENT, LANDLORD & B.D. COMMENTS	07/19/2019

* INDICATES NO REVISION TO THIS SHEET

MECHANICAL SCHEDULES AND DETAILS

DRAWN BY: JB CHECKED BY: JAE

DATE ISSUED: 06/07/2019
PROJECT NO: 190148
DRAWING NO:
M2.0

NOT USED

N

FIRE PROTECTION AND MECHANICAL SPECIFICATIONS

21 05 00 FIRE PROTECTION GENERAL PROVISIONS

A. PROVIDE ALL MATERIALS AND EQUIPMENT AND PERFORM ALL LABOR REQUIRED TO INSTALL A FIRE PROTECTION SYSTEM, COMPLETE AS INDICATED ON THE DRAWINGS AND AS REQUIRED BY CODE AND AS SPECIFIED HEREIN.

B. THE GENERAL CONTRACTOR, UNLESS OTHERWISE NOTED IS TO PROVIDE POWER WIRING FOR EACH ITEM OF ELECTRICAL EQUIPMENT AND MAKE FINAL CONNECTIONS TO MOTORS.

C. ALL FINISH PAINTING IS TO BE PERFORMED BY THE GENERAL CONTRACTOR, EXCEPT AS NOTED ELSEWHERE. GENERAL CONTRACTOR, AT THIS CONTRACTOR'S EXPENSE, SHALL RESTORE TO ORIGINAL CONDITION ANY PAINTING DEFACED DURING CONSTRUCTION AND AFTER ORIGINAL PAINTING.

D. ALL WORK SHALL CONFORM TO CODES, RULES, AND REGULATIONS:

1. NATIONAL ELECTRICAL CODE.
2. STANDARD FOR INSTALLATION OF AIR CONDITIONING AND VENTILATING SYSTEMS, NFPA 90A.
3. CODE FOR SAFETY TO LIFE FROM FIRE IN BUILDINGS AND STRUCTURES, NFPA 101.
4. FEDERAL OCCUPATIONAL SAFETY AND HEALTH STANDARDS.
5. STATE MECHANICAL CODE.
6. STATE BUILDING CODE
7. STATE INDUSTRIAL COMMISSION REQUIREMENTS.
8. LOCAL BUILDING CODE REQUIREMENTS.
9. BUILDING INSURING AGENCY REQUIREMENTS.
10. STATE PLUMBING CODE.
11. NFPA.

E. ALL PERMITS REQUIRED BY LAWS, ORDINANCES AND BUILDING CODES HAVING JURISDICTION SHALL BE OBTAINED AT THE PROPER TIME BY AND AT THE EXPENSE OF THIS CONTRACTOR.

F. THIS CONTRACTOR SHALL OBTAIN ALL INSPECTIONS REQUIRED BY ALL LAWS, ORDINANCES AND PUBLIC AUTHORITY HAVING JURISDICTION AND SHALL OBTAIN CERTIFICATES OF SUCH INSPECTIONS AND SUBMIT SAME TO THE ARCHITECT AND SHALL PAY ALL FEES, CHARGES, ASSESSMENTS AND OTHER EXPENSES IN CONNECTION THEREWITH.

G. THE MATERIALS AND EQUIPMENT INSTALLED IN THE WORK SHALL MEET THE REQUIREMENTS OF THE CONTRACT DOCUMENTS AND NO MATERIALS OR EQUIPMENT SHALL BE ORDERED UNTIL REVIEWED BY THE ENGINEER, LANDLORD AND/OR ARCHITECT.

H. CATALOG DATA FOR EQUIPMENT REVIEWED BY THE ARCHITECT SHALL NOT SUPERSEDE THE ENGINEER'S CONTRACT DOCUMENTS. THE REVIEW OF THE ENGINEER SHALL NOT RELIEVE THE GENERAL CONTRACTOR FROM RESPONSIBILITY FOR DEVIATIONS FROM DRAWINGS OR SPECIFICATIONS, PROVIDING PROPER CLEARANCE, FABRICATION PROCESS AND COORDINATION WITH OTHER TRADES.

I. PROVIDE INSTRUCTION TO LANDLORD'S OPERATING PERSONNEL AS NECESSARY, SHOWING LOCATIONS AND PROPER OPERATION OF MAJOR ITEMS OF EQUIPMENT AND SYSTEM COMPONENTS AND REFERRING TO THE OPERATING INSTRUCTION MANUAL DESCRIBED BELOW AS A GUIDE.

J. WITHIN 90 DAYS AFTER THE DATE OF SYSTEM ACCEPTANCE, RECORD DRAWINGS OF THE ACTUAL INSTALLATION SHALL BE PROVIDED TO THE BUILDING LANDLORD. RECORD DRAWINGS SHALL INCLUDE AS A MINIMUM THE LOCATION AND PERFORMANCE DATA ON EACH PIECE OF EQUIPMENT.

K. ANY REFERENCE TO TENANT OR TENANT'S CONSTRUCTION MANAGER OR FURNISHED BY ANY OF THE ABOVE REFERS TO LANDS' END.

L. REFER TO RESPONSIBILITY SCHEDULE ON SHEET G1.2 FOR INFORMATION IN REGARD TO RESPONSIBILITY OF WORK OR ITEMS WHICH MAY AFFECT BID.

M. DEMOLITION

1. GENERAL CONTRACTOR SHALL BE RESPONSIBLE FOR THE DEMOLITION AND REMOVAL OF EXISTING WORK. FIELD VERIFY AND COORDINATE ANY EXISTING EQUIPMENT REQUIRED TO BE LEFT INTACT AND PROTECT EQUIPMENT TO REMAIN DURING CONSTRUCTION.

N. WARRANTY AND GUARANTEE

1. GENERAL CONTRACTOR SHALL GUARANTEE ALL MATERIALS AND LABOR PROVIDED UNDER THIS CONTRACT AND SHALL MAKE GOOD, REPAIR OR REPLACE AT NO ADDITIONAL COST ANY DEFECTIVE WORK, MATERIAL, OR EQUIPMENT DISCOVERED WITHIN 12 MONTHS FROM THE DATE OF CERTIFICATE OF OCCUPANCY. THIS GUARANTEE SHALL EXTEND TO LABOR AND MISCELLANEOUS MATERIALS REQUIRED FOR THE INSTALLATION OF EQUIPMENT. THE GENERAL CONTRACTOR IS RESPONSIBLE TO VERIFY, COORDINATE AND FOLLOW ALL PROPER HANDLING AND INSTALLATION TECHNIQUES WITH MANUFACTURER(S) IN ORDER TO MAINTAIN MANUFACTURER'S WARRANTY.

21 05 13 COMMON WORK RESULTS FOR FIRE SUPPRESSION

A. MODIFY THE EXISTING SPRINKLER SYSTEM AND FURNISH ALL MATERIALS, LABOR, TOOLS, ADMINISTRATION, TRANSPORTATION, INCIDENTALS AND APPURTENANCES WHICH ARE REQUIRED TO COMPLETE IN EVERY DETAIL AND LEAVE IN WORKING ORDER ALL ITEMS OF WORK CALLED FOR HEREIN OR SHOWN ON THE ACCOMPANYING DRAWINGS. CONTRACTOR IS RESPONSIBLE FOR CONNECTING TO THE LANDLORD'S FIRE ALARM SYSTEM. COORDINATE WITH LANDLORD'S APPROVED FIRE ALARM AND SPRINKLER CONTRACTORS.

B. INCLUDE ANY MINOR ITEMS OF WORK NECESSARY TO PROVIDE A COMPLETE AND FULLY OPERATIVE FIRE PROTECTION SYSTEM.

C. THIS CONTRACTOR SHALL BE RESPONSIBLE FOR DETERMINING THE EXACT HAZARD CLASSIFICATION, AS WELL AS, THE QUANTITY, SPACING, AND PROTECTED AREA LIMITATION OF SPRINKLER HEADS. CONTRACTOR SHALL FURTHER BE RESPONSIBLE FOR CONFIRMING HIS DETERMINATION WITH THE LANDLORD'S INSURING AGENCY AND THE LOCAL FIRE AUTHORITY HAVING JURISDICTION OVER THE PROJECT.

D. WHERE APPLICABLE, LOCATE SPRINKLER HEADS IN CENTER OF CEILING TILE, USE ARMOVER ON ALL SPRINKLER BRANCH LINES TO ACCOMPLISH EXACT LOCATION OF HEAD.

E. PROVIDE AN NFPA-13 APPROVED AUTOMATIC FIRE SPRINKLER SYSTEM IN BUILDING. SYSTEM SHALL BE APPROVED BY THE LOCAL AND STATE FIRE MARSHAL'S OFFICE.

F. THE INSTALLING CONTRACTOR SHALL BE LICENSED AND CERTIFIED IN THE INSTALLATION OF AUTOMATIC SPRINKLER SYSTEMS IN THIS STATE.

G. THIS CONTRACTOR SHALL OBTAIN AND PAY FOR ANY INSPECTION FEES, CHARGES, AND ANY OTHER GOVERNMENTAL FEES APPLICABLE.

H. THIS CONTRACTOR SHALL FILE ALL NECESSARY DRAWINGS, SPECIFICATIONS, CONTRACTOR'S MATERIAL AND TEST CERTIFICATES.

I. THIS CONTRACTOR SHALL OBTAIN A CERTIFICATE OF INSPECTION AND APPROVAL AND SUBMIT TO THE ARCHITECT PRIOR TO THE REQUEST FOR FINAL PAYMENT.

J. THIS CONTRACTOR SHALL PROVIDE ALL PRODUCTS AND LABOR REQUIRED TO COMPLETE THE INSTALLATION OF ALL FIRE PROTECTION SPRINKLER SYSTEMS.

K. FIRE PROTECTION PIPING AND EQUIPMENT LAYOUT SHALL BE COORDINATED WITH ALL EQUIPMENT, BOTH KNOWN AND UNKNOWN, AND EQUIPMENT INCLUDED UNDER OTHER DIVISIONS OF THE SPECIFICATIONS.

L. ALL FIRE PROTECTION PIPING SHALL BE INSTALLED AS CONCEALED WORK, WHERE APPLICABLE.

M. THE ARCHITECT RESERVES THE RIGHT TO CHANGE THE LOCATION OF ANY SPRINKLER HEAD DURING THE SUBMITTAL PROCESS EVEN IF THE MOVE SHOULD REQUIRE ADDITIONAL HEADS.

N. FILL ANNULAR SPACE BETWEEN SLEEVE AND PIPE OR INSULATION ON ALL PENETRATIONS THROUGH FIRE RATED WALLS. FIRESTOPPING MATERIALS SHALL BE UL CLASSIFIED AND MEET THE REQUIREMENTS OF ASTM. THE METHOD OF INSULATION SHALL CONFORM TO UL FIRE RESISTANCE DIRECTORY.

O. CEILING GRID SYSTEMS SHALL NOT BE USED TO SUPPORT FIRE PROTECTION ITEMS, PIPING, OR ANY OTHER EQUIPMENT. EACH UTILITY AND THE CEILING GRID SYSTEM SHALL BE A SEPARATE INSTALLATION AND EACH SHALL BE INDEPENDENTLY SUPPORTED FROM THE BUILDING STRUCTURE. WHERE INTERFERENCE OCCURS, IN ORDER TO SUPPORT EQUIPMENT OR CEILING GRID SYSTEM, THIS CONTRACTOR MUST INSTALL TRAPEZE TYPE HANGERS OR SUPPORTS WHICH SHALL NOT BE LOCATED WHERE THEY INTERFERE WITH ACCESS TO FIRE DAMPERS, VALVES, LIGHT FIXTURES, AND OTHER MECHANICAL OR ELECTRICAL ITEMS.

P. INSTALL ALL SPRINKLER HEADS IN ROOMS IN AN ESTHETIC MANNER. SPRINKLER ARRANGEMENT SHALL BE PARALLEL AND PERPENDICULAR TO THE BUILDING WALLS. COORDINATE WITH ARCHITECT AND TENANT.

Q. GENERAL CONTRACTOR SHALL VERIFY THE LOCATION OF UTILITIES AND NOTE CONDITIONS WHICH WOULD AFFECT THE WORK. ALL DISCREPANCIES SHALL THEN BE REPORTED TO THE LANDLORD'S TENANT COORDINATOR PRIOR TO THE BID AWARD.

R. INSTALLATION WILL NOT BE CONSIDERED COMPLETE UNLESS AND UNTIL WRITTEN ACCEPTANCE IS RECEIVED FROM THE STATE FIRE MARSHAL AND THE LANDLORD'S INSURING AGENCY.

S. GENERAL CONTRACTOR TO MAINTAIN ONE SET OF DRAWINGS ON THE JOB TO BE USED STRICTLY FOR RECORDING ANY INSTALLATION DEVIATIONS FROM THE CONTRACT DRAWINGS.

T. GENERAL CONTRACTOR IS RESPONSIBLE FOR DAILY CLEAN-UP AND REMOVAL OF FIRE PROTECTION DEBRIS FROM THE SITE WEEKLY. THE PREMISES SHALL BE KEPT IN A NEAT AND ORDERLY CONDITION.

U. GENERAL CONTRACTOR SHALL REVIEW AND FOLLOW ALL LANDLORD REQUIREMENTS. THE SUBMITTING OF A BID AUTOMATICALLY IMPLIES THAT THESE REQUIREMENTS HAVE BEEN REVIEWED AND ARE IN THE BID PRICE AND INFORM LANDLORD IN ADVANCE OF ANY DOWN TIME.

V. ALL SLEEVES AND OPENINGS THROUGH FIRE RATED WALLS AND/OR FLOORS SHALL BE FIRE SEALED WITH CALCIUM SILICATE, SILICONE "RTV" FOAM, "3M" FIRE RATED SEALANTS OR EQUAL, SO AS TO RETAIN THEIR FIRE RATING.

21 05 16 SHOP DRAWINGS

A. CONTRACTOR SHALL SUBMIT FOR THE ARCHITECT'S AND LANDLORD REVIEW SIX (6) COMPLETE COPIES OF THE CATALOG DATA AND/OR SHOP DRAWINGS FOR THE LISTED ITEMS OF EQUIPMENT AND ALL COMPONENTS TO BE USED IN THE WORK, INCLUDING SPECIFIC PERFORMANCE DATA, MATERIAL DESCRIPTION, RATING, CAPACITY, WORKING PRESSURE, MATERIAL GAUGE OF THICKNESS, BRAND NAME, CATALOG NUMBER AND GENERAL TYPE. THE SUBMISSION SHALL BE COMPILED BY GENERAL CONTRACTOR AND REVIEWED BY ENGINEER BEFORE ANY OF THE EQUIPMENT IS ORDERED.

1. SPRINKLERS (AS REQUIRED)
2. VALVES (AS REQUIRED)
3. TAMPER SWITCHES (AS REQUIRED)
4. WATER FLOW SWITCHES (AS REQUIRED)
5. HYDRAULIC CALCULATIONS (AS REQUIRED)
6. CONNECTIONS TO LANDLORD'S FIRE ALARM SYSTEM (WHERE REQUIRED).

B. WHEN SUBMITTED FOR THE ARCHITECT'S REVIEW, SHOP DRAWINGS SHALL BEAR GENERAL CONTRACTOR'S CERTIFICATION THAT THEY HAVE REVIEWED, CHECKED AND APPROVED THE SHOP DRAWINGS, THAT THEY ARE IN HARMONY WITH THE REQUIREMENTS OF THE PROJECT AND WITH THE PROVISIONS OF THE CONTRACT DOCUMENTS AND THAT THEY HAVE VERIFIED ALL FIELD MEASUREMENTS AND CONSTRUCTION CRITERIA, MATERIALS, CATALOG NUMBER AND FIELD MEASUREMENTS AND SIMILAR DATA. GENERAL CONTRACTOR SHALL ALSO CERTIFY THAT THE WORK REPRESENTED BY THE SHOP DRAWINGS IS RECOMMENDED BY THIS CONTRACTOR AND THE GENERAL CONTRACTOR'S GUARANTEE WILL FULLY APPLY.

C. ALL CONTRACTORS SUBMITTING PROPOSALS FOR THIS WORK SHALL FIRST EXAMINE THE SITE AND ALL CONDITIONS THEREIN. ALL PROPOSALS SHALL TAKE INTO CONSIDERATION ALL SUCH CONDITIONS AS THEY MAY AFFECT THE WORK UNDER THIS CONTRACT. THE SUBMITTING OF A BID AUTOMATICALLY IMPLIES THAT THIS EXAMINATION OF THE SITE HAS BEEN DONE.

21 05 19 TESTS

A. THIS CONTRACTOR SHALL BE RESPONSIBLE FOR ALL TESTING OF SPRINKLER PIPING PER NFPA.

B. TEST SPRINKLER PIPING WITH A HYDROSTATIC TEST AT 200 PSI FOR 2 HOURS WITH NO VISIBLE LEAKAGE.

C. TEST ALARMS, FLOW SWITCHES, AND TAMPERPROOF SWITCHES AND ADJUST AS NECESSARY.

D. GENERAL CONTRACTOR AND LANDLORD SHALL SIGN CERTIFICATES, INDICATING WITNESSING OF ALL TESTS REQUIRED BY NFPA-13 FOR ABOVE GROUND PIPING.

E. REPAIR ANY LEAKING JOINTS AND REPAIR ANY DAMAGE TO THE FACILITY THAT THE LEAK MAY HAVE CREATED. CLEAN, PAINT, OR REPLACE ANY DAMAGED COVERINGS AS REQUIRED TO MEET THE LANDLORD'S APPROVAL.

F. NOTIFY THE LANDLORD IN WRITING FOR ANY SCHEDULING OF ANY TESTS OR DOWNTIME OF THE EXISTING SPRINKLER SYSTEM.

21 05 25 SUPPORTS, ANCHORS, AND SEALS

A. UL LISTED HANGERS, BEAM CLAMPS, HANGER RODS, PIPE ATTACHMENTS, AND PIPE SLEEVES SHALL BE PER SP-58. EQUAL MANUFACTURERS TO BE SIMPLEX GRINNELL, B-LINE, OR MICHIGAN HANGERS.

B. ALL HANGER ASSEMBLIES SHALL BE UL AND FM APPROVED.

C. HANGER SPACING SHALL MEET NFPA-13 MINIMUM REQUIREMENTS.

21 05 26 INTERIOR PIPE TUBE AND FITTINGS AND SPRINKLER HEADS

A. SPRINKLER HEADS:

1. ALL SPRINKLER HEADS SHALL BE NEW, QUICK RESPONSE, U.L. LISTED, F.M. LISTED AND APPROVED AUTOMATIC SPRAY TYPE AS MANUFACTURED BY STAR, RELIABLE, SIMPLEX-GRINNELL, VIKING, OR CENTRAL SPRINKLER CO.
2. ALL SPRINKLER HEADS SHALL BE RATED FOR 165°F UNLESS INDICATED OTHERWISE ON DRAWINGS OR REQUIRED BY LOCAL CODES.
3. "SALES" AREA SPRINKLER HEADS ARE TO BE FULLY CONCEALED ADJUSTABLE SCREW TYPE WITH WHITE COVER PLATE TO MATCH CEILING.
4. "NON-SALES" AND "SALES" AREA SPRINKLER HEADS ARE TO BE FULLY CONCEALED ADJUSTABLE SCREW TYPE WITH WHITE COVER PLATE TO MATCH CEILING.
5. "NON-SALES" AND "SALES" NO CEILING SPRINKLER HEADS ARE TO BE CHROME UPRIGHT, ADJUSTABLE SCREW TYPE.
6. "MALL BULKHEAD" AREA SPRINKLER HEADS ARE TO BE FULLY CONCEALED ADJUSTABLE SCREW TYPE WITH WHITE COVER PLATE TO MATCH CEILING.

B. PIPING:

1. SCHEDULE 40, BLACK STEEL PIPE, ASTM A-53 FOR FERROUS PIPING, WELDED AND SEAMLESS, ANSI B-36-10-70 FOR WROUGHT STEEL PIPE.
2. CAST IRON OR MALLEABLE IRON SCREWED FITTINGS FOR PIPES 2 INCHES AND SMALLER. SCREWED OR CAST IRON FLANGED JOINTS FOR PIPES LARGER THAN 2 INCHES.
3. GALVANIZED OR BLACK MALLEABLE IRON WITH BRASS SEAT SCREWED UNIONS FOR PIPES 2 INCHES AND SMALLER.
4. MECHANICAL COUPLINGS AS MANUFACTURED BY VICTAULIC OR EQUAL ARE ACCEPTABLE, WHERE APPROVED BY CODE AND THE LANDLORD.
5. HANGERS SHALL COMPLY WITH LANDLORD AND CODE REQUIREMENTS.

C. SPRINKLER SPACING SHALL NOT EXCEED 130 SQ. FT. IN "SALES" AREAS AND 100 SQ. FT. IN "STOCK" AREAS. COMPLY WITH LANDLORD'S DESIGN CRITERIA. PIPE SIZING SHALL BE BASED ON NFPA ORDINARY HAZARD.

D. ALL SPRINKLER LINES SHALL BE INSTALLED CONCEALED, AVOIDING INTERFERENCE WITH OTHER TRADES.

E. WHERE POSSIBLE, REWORK THE EXISTING SPRINKLER SYSTEM TO MEET THE NEW REQUIREMENTS OF THIS DESIGN.

F. PROVIDE AND INSTALL A VALVED TEST CONNECTION IN AN ACCESSIBLE LOCATION FOR THE SPRINKLER SYSTEM AS REQUIRED OR REQUESTED BY THE LANDLORD, LOCAL INSPECTOR, OR INSURANCE CARRIER.

G. THIS CONTRACTOR SHALL BE RESPONSIBLE FOR DAMAGE CAUSED BY LEAKS IN ANY OF THE EQUIPMENT INSTALLED. ALL REPAIRS OR REPLACEMENT OF DAMAGES SHALL BE BY THIS CONTRACTOR AT THIS CONTRACTOR'S EXPENSE.

H. PROPERLY COMPLETED AND SIGNED "SPRINKLER CONTRACTOR'S MATERIAL AND TEST CERTIFICATES" SHALL BE FURNISHED TO THE LANDLORD, AND AUTHORITIES HAVING JURISDICTION.

21 05 30 SPRINKLER PIPING SPECIALTIES

A. PROVIDE ALL NECESSARY DRAINS. COORDINATE THE EXACT LOCATION WITH THE ARCHITECT AND LANDLORD PRIOR TO ANY INSTALLATION.

B. THIS CONTRACTOR IS TO BECOME INFORMED OF THE EXACT DIMENSIONS OF FINISHED WORK WHERE PIPES, DUCTS AND EQUIPMENT ARE TO BE PLACED AND WILL ARRANGE THE WORK ACCORDINGLY, ASSUMING ALL RESPONSIBILITY FOR PROPER LOCATION AND COORDINATION OF THE WORK.

(END OF FIRE PROTECTION SPECIFICATIONS)

23 05 00 GENERAL PROVISIONS FOR HVAC

A. PROVIDE ALL MATERIALS AND EQUIPMENT AND PERFORM ALL LABOR REQUIRED TO INSTALL A HEATING, VENTILATING, AIR CONDITIONING SYSTEM, COMPLETE AS INDICATED ON THE DRAWINGS, AS REQUIRED BY CODE AND AS SPECIFIED HEREIN.

B. THE GENERAL CONTRACTOR, UNLESS OTHERWISE NOTED IS TO PROVIDE POWER WIRING FOR EACH ITEM OF ELECTRICAL EQUIPMENT AND MAKE FINAL CONNECTIONS TO MOTORS.

C. ALL FINISH PAINTING IS TO BE PERFORMED BY THE GENERAL CONTRACTOR, EXCEPT AS NOTED ELSEWHERE. GENERAL CONTRACTOR, AT THIS CONTRACTOR'S EXPENSE, SHALL RESTORE TO ORIGINAL CONDITION ANY PAINTING DEFACED DURING CONSTRUCTION AND AFTER ORIGINAL PAINTING.

D. ALL WORK SHALL CONFORM TO CODES, RULES, AND REGULATIONS:

1. NATIONAL ELECTRICAL CODE.
2. STANDARD FOR INSTALLATION OF AIR CONDITIONING AND VENTILATING SYSTEMS, NFPA 90A.
3. CODE FOR SAFETY TO LIFE FROM FIRE IN BUILDINGS AND STRUCTURES, NFPA 101.
4. FEDERAL OCCUPATIONAL SAFETY AND HEALTH STANDARDS.
5. STATE MECHANICAL CODE.
6. STATE BUILDING CODE
7. STATE INDUSTRIAL COMMISSION REQUIREMENTS.
8. LOCAL BUILDING CODE REQUIREMENTS.
9. BUILDING INSURING AGENCY REQUIREMENTS.
10. STATE PLUMBING CODE.
11. NFPA.

E. ALL PERMITS REQUIRED BY LAWS, ORDINANCES AND BUILDING CODES HAVING JURISDICTION SHALL BE OBTAINED AT THE PROPER TIME BY AND AT THE EXPENSE OF THIS CONTRACTOR.

F. THIS CONTRACTOR SHALL OBTAIN ALL INSPECTIONS REQUIRED BY ALL LAWS, ORDINANCES AND PUBLIC AUTHORITY HAVING JURISDICTION AND SHALL OBTAIN CERTIFICATES OF SUCH INSPECTIONS AND SUBMIT SAME TO THE ARCHITECT AND SHALL PAY ALL FEES, CHARGES, ASSESSMENTS AND OTHER EXPENSES IN CONNECTION THEREWITH.

G. PIPING AND EQUIPMENT LAYOUT IS SCHEMATIC. EXACT LOCATIONS ARE DETERMINED BY STRUCTURAL AND OTHER CONDITIONS. DESIGN OF SYSTEM MAY NOT BE CHANGED. ONLY EXACT LOCATION OF PIPING AND DUCTS MAY BE REVISED TO SUIT CONSTRUCTION CONDITIONS AND AID IN COORDINATION WITH WORK OF OTHER CONTRACTORS.

H. THE MATERIALS AND EQUIPMENT INSTALLED IN THE WORK SHALL MEET THE REQUIREMENTS OF THE CONTRACT DOCUMENTS AND NO MATERIALS OR EQUIPMENT SHALL BE ORDERED UNTIL REVIEWED BY THE ENGINEER, LANDLORD AND/OR ARCHITECT.

I. GENERAL CONTRACTOR SHALL SUBMIT SHOP DRAWINGS PER THE DOCUMENTS PROVIDED BY THIS CONTRACTOR.

J. CATALOG DATA FOR EQUIPMENT REVIEWED BY THE ARCHITECT SHALL NOT SUPERSEDE THE ENGINEER'S CONTRACT DOCUMENTS. THE REVIEW OF THE ENGINEER SHALL NOT RELIEVE THIS CONTRACTOR FROM RESPONSIBILITY FOR DEVIATIONS FROM DRAWINGS OR SPECIFICATIONS, PROVIDING PROPER CLEARANCE, FABRICATION PROCESS AND COORDINATION WITH OTHER TRADES.

K. WHEN SUBMITTED FOR THE ARCHITECT'S REVIEW, SHOP DRAWINGS SHALL BEAR THIS CONTRACTOR'S CERTIFICATION THAT THE GENERAL CONTRACTOR HAS REVIEWED, CHECKED AND APPROVED THE SHOP DRAWINGS, THAT THEY ARE IN HARMONY WITH THE REQUIREMENTS OF THE PROJECT AND WITH THE PROVISIONS OF THE CONTRACT DOCUMENTS AND THAT THIS CONTRACTOR HAS VERIFIED ALL FIELD MEASUREMENTS AND CONSTRUCTION CRITERIA, MATERIALS, CATALOG NUMBERS AND SIMILAR DATA. GENERAL CONTRACTOR SHALL ALSO CERTIFY THAT THE WORK REPRESENTED BY THE SHOP DRAWINGS AS RECOMMENDED BY THIS CONTRACTOR AND THE GENERAL CONTRACTOR'S GUARANTEE WILL FULLY APPLY.

L. ALL CONTRACTORS SUBMITTING PROPOSALS FOR THIS WORK SHALL FIRST EXAMINE THE SITE AND ALL CONDITIONS THEREIN. ALL PROPOSALS SHALL TAKE INTO CONSIDERATION ALL SUCH CONDITIONS AS MAY AFFECT THE WORK UNDER THIS CONTRACT. THE SUBMITTING OF A BID AUTOMATICALLY IMPLIES THAT THIS EXAMINATION OF SITE HAS BEEN DONE.

M. GENERAL CONTRACTOR SHALL VERIFY LOCATION OF UTILITIES AND NOTE CONDITIONS WHICH WOULD AFFECT THE WORK. ALL DISCREPANCIES SHALL THEN BE REPORTED PRIOR TO THE BID AWARD.

N. PROVIDE INSTRUCTION TO LANDLORD'S OPERATING PERSONNEL AS NECESSARY, SHOWING LOCATIONS AND PROPER OPERATION OF MAJOR ITEMS OF EQUIPMENT AND SYSTEM COMPONENTS AND REFERRING TO THE OPERATING INSTRUCTION MANUAL DESCRIBED BELOW AS A GUIDE.

O. COMPILE WRITTEN MANUAL OF OPERATING INSTRUCTIONS INCLUDING COPIES OF SHOP DRAWINGS AND A LISTING OF EQUIPMENT SUPPLIERS. ASSEMBLE IN 8-1/2" X 11" HARD BACKED INDEXED BINDER. MATERIAL SHALL BE AS FOLLOWS:

1. TITLE PAGE: TITLE OF JOB, LANDLORD/TENANT, ADDRESS, DATE, SUBMISSION, CONTRACTOR AND ENGINEER.
2. INDEX
3. LIST OF MAJOR EQUIPMENT USED IN PROJECT ACCOMPANIED BY GENERAL CONTRACTOR PURCHASE ORDER NUMBERS AND SUPPLIERS NAMES AND ADDRESSES.
4. ONE COPY OF EACH SHOP DRAWING GROUPED BY TYPES OF EQUIPMENT (I.E., ROOFTOP UNITS, FANS, ETC.)
5. SECTION FOR EACH SYSTEM INCLUDING:
   a. BRIEF DESCRIPTION OF SYSTEM OPERATION WITH LOCATION OF MAJOR COMPONENTS.
   b. HVAC SYSTEM MAINTENANCE AND CALIBRATION INFORMATION, INCLUDING WIRING DIAGRAMS AND SCHEMATICS.

P. SUBMIT A COMPLETED COPY TITLED "HVAC OPERATING INSTRUCTION MANUAL" ON THE BINDING EDGE OF BINDER TO ARCHITECT FOR APPROVAL. AFTER ARCHITECT'S REVIEW AND ANY CORRECTIONS REQUIRED ARE COMPLETED, SUBMIT A COPY OF THE MANUAL TO THE LANDLORD.

Q. WITHIN 90 DAYS AFTER THE DATE OF SYSTEM ACCEPTANCE, RECORD DRAWINGS OF THE ACTUAL INSTALLATION SHALL BE PROVIDED TO THE BUILDING LANDLORD. RECORD DRAWINGS SHALL INCLUDE AS A MINIMUM THE LOCATION AND PERFORMANCE DATA ON EACH PIECE OF EQUIPMENT, GENERAL CONFIGURATION OF DUCT DISTRIBUTION SYSTEM INCLUDING SIZES, AND THE AIR DESIGN FLOW RATES.

R. ANY REFERENCE TO TENANT OR TENANT CONSTRUCTION MANAGER, OR FURNISHED BY ANY OF THE ABOVE, REFERS TO LANDS' END.

S. REFER TO RESPONSIBILITY SCHEDULE ON SHEET G1.2 FOR INFORMATION IN REGARD TO RESPONSIBILITY OF WORK OR ITEMS WHICH MAY AFFECT BID.

T. TRADE NAMES, MANUFACTURERS AND SHOP DRAWINGS

1. WHERE TRADE NAMES AND MANUFACTURERS ARE USED ON THE DRAWINGS OR IN THE SPECIFICATIONS, THE EXACT EQUIPMENT SHALL BE USED. THE USE OF ANY UNAUTHORIZED EQUIPMENT SHALL BE SUBJECT TO REMOVAL AND REPLACEMENT AT THIS CONTRACTOR'S EXPENSE.
2. GENERAL CONTRACTOR SHALL SUBMIT ONLY SUBSTITUTION REQUESTS TO TENANT CONSTRUCTION MANAGER FOR APPROVAL. SUBMISSIONS SHALL BE MADE EARLY ENOUGH IN PROJECT TO ALLOW FOUR (4) WORKING DAYS FOR TENANT CONSTRUCTION MANAGER'S REVIEW WITHOUT CAUSING DELAYS OR CONFLICTS TO THE JOB'S PROGRESS. SUBMITTALS SHALL BEAR THE STAMP OF THE GENERAL CONTRACTOR AND THE SUB-CONTRACTOR SHOWING THAT HE HAS REVIEWED AND CONFIRMED THAT THE SUBMITTALS ARE IN CONFORMANCE WITH THE CONTRACT DRAWINGS AND SPECIFICATIONS OR INDICATE WHERE EXCEPTIONS HAVE BEEN TAKEN.

U. DEMOLITION

1. GENERAL CONTRACTOR SHALL BE RESPONSIBLE FOR THE DEMOLITION AND REMOVAL OF EXISTING WORK. FIELD VERIFY AND COORDINATE ANY EXISTING EQUIPMENT REQUIRED TO BE LEFT INTACT AND PROTECT EQUIPMENT TO REMAIN DURING CONSTRUCTION.

V. FINAL HVAC INSPECTIONS

1. ASIDE FROM NORMAL INTERIM INSPECTIONS OF WORK IN PLACE, TENANT SHALL HAVE AN INDEPENDENT CONTRACTOR INSPECT THE FINISHED INSTALLATION UPON COMPLETION FOR COMPLIANCE WITH THE PLANS, SPECIFICATIONS AND CODES. THE INSTALLING CONTRACTOR WILL BE RESPONSIBLE TO BRING ALL ITEMS REPORTED BY THE INDEPENDENT CONTRACTOR UP TO PLANS AND SPECIFICATION REQUIREMENTS.

W. WARRANTY AND GUARANTEE

1. GENERAL CONTRACTOR SHALL GUARANTEE ALL MATERIALS AND LABOR PROVIDED UNDER THIS CONTRACT AND SHALL MAKE GOOD, REPAIR OR REPLACE AT NO ADDITIONAL COST ANY DEFECTIVE WORK, MATERIAL, OR EQUIPMENT DISCOVERED WITHIN 12 MONTHS FROM THE DATE OF CERTIFICATE OF OCCUPANCY. THIS GUARANTEE SHALL EXTEND TO LABOR AND MISCELLANEOUS MATERIALS REQUIRED FOR THE INSTALLATION OF EQUIPMENT, BUT SHALL NOT OVERLAP WITH WARRANTY PROVIDED BY MANUFACTURER. THE CONTRACTOR IS RESPONSIBLE TO VERIFY, COORDINATE AND FOLLOW ALL PROPER HANDLING AND INSTALLATION TECHNIQUES WITH MANUFACTURER(S) IN ORDER TO MAINTAIN MANUFACTURER'S WARRANTY.
2. HVAC UNITS SHALL FURNISHED BY THIS CONTRACTOR. UPON DELIVERY, GENERAL AND INSTALLING CONTRACTOR SHALL VERIFY ALL EQUIPMENT IS AS SPECIFIED ON DRAWINGS INCLUDING ALL ELECTRICAL REQUIREMENTS, ACCESSORIES AND OTHER REQUIREMENTS. ANY DISCREPANCIES MUST BE REPORTED TO TENANT CONSTRUCTION MANAGER WITHIN THE FIRST TWENTY-FOUR (24) HOURS AFTER DELIVERY.

23 05 01 HVAC BASIC MATERIALS AND METHOD

A. THIS CONTRACTOR IS TO BECOME INFORMED OF THE EXACT DIMENSIONS OF FINISHED WORK WHERE PIPES, DUCTS AND EQUIPMENT ARE TO BE PLACED AND WILL ARRANGE THE WORK ACCORDINGLY, ASSUMING ALL RESPONSIBILITY FOR PROPER LOCATION AND COORDINATION OF THE WORK.

B. IN THE ERECTION OF THE DUCTWORK, SPECIAL CARE SHALL BE USED PROVIDING SUPPORT.

C. ALL DUCTWORK SHALL BE PLACED SO AS TO AVOID INTERFERENCE WITH PLUMBING PIPES, ELECTRIC CONDUITS OR PIPES OF OTHER CONTRACTORS.

D. ALL DUCTWORK MUST BE PROVIDED WITH SUFFICIENT DISTANCE FROM WALLS, PIPES AND OTHER OBSTACLES TO PERMIT THE APPLICATION OF FULL THICKNESS OF INSULATION SPECIFIED.

E. THIS CONTRACTOR SHALL PERFORM AN ACCURATE AND COMPLETE BALANCE OF AIR SYSTEMS AS PART OF THIS CONTRACT, WHICH SHALL BE COMPLETED BEFORE FINAL ACCEPTANCE OF THE WORK OF THIS CONTRACT. AIR BALANCE SHALL BE SUBCONTRACTED TO A CERTIFIED MEMBER OF ASSOCIATED AIR BALANCE COUNCIL.

F. VIBRATION ISOLATION DEVICES

1. VIBRATION ISOLATION DEVICES SHALL BE FURNISHED AND INSTALLED WITH SUPPORTS BETWEEN VIBRATING EQUIPMENT AND THE STRUCTURE (FANS, AIR HANDLERS, ETC.) BY THIS CONTRACTOR.
2. VIBRATING EQUIPMENT HUNG FROM STRUCTURE SHALL BE ISOLATED WITH RUBBER AND SPRING DEVICES, VIBRATING EQUIPMENT SUPPORTED FROM FLOOR OR DECK SHALL BE ISOLATED WITH HOUSED SPRING MOUNT DEVICES.
3. EXAMINE DEAD LOAD AND OPERATING LOAD CONDITIONS WHEN SELECTING DEVICES, ADJUST FOR PROPER ALIGNMENT AND LOADING. AVOID "GROUNDING" THE ISOLATOR.
4. CHECK HANGER ROD SIZE FOR ALLOWABLE LOADS AT THE ISOLATING DEVICE AND AT THE UPPER AND LOWER ATTACHMENTS TO STRUCTURES, DUCTS, EQUIPMENT, ETC.
5. CONSULT MANUFACTURER FOR APPLICATION DATA.

23 05 93 TESTING, ADJUSTING AND BALANCING FOR HVAC

A. ALL AIR DISTRIBUTION SYSTEMS ARE TO BE BALANCED IN ACCORDANCE WITH GENERALLY ACCEPTED ENGINEERING STANDARDS BY A CERTIFIED AIR BALANCE CONTRACTOR. DUCTED AIR RATES ARE TO BE MEASURED AND ADJUSTED TO DELIVER FINAL FLOW RATES WITHIN 10% OF DESIGN RATES. GENERAL CONTRACTOR TO DO ALL ADJUSTMENTS REQUIRED TO BALANCE THE SYSTEM WITHIN THE DESIGN PARAMETERS. UNITS RPMS ARE TO BE ADJUSTED FIRST TO GET THE UNIT TO THE LOWEST RPMS TO DELIVER THE REQUIRED CFM TO THE DIFFUSERS, THEN THE DAMPERS TO THE DIFFUSERS ARE TO BE ADJUSTED TO BALANCE THE SYSTEM. GENERAL CONTRACTOR IS TO PROVIDE ALL LABOR AND MATERIALS REQUIRED TO BALANCE THE SYSTEM.

B. AFTER CORRECTING BALANCE OF ALL AIR SYSTEMS TO WITHIN 10% OF DESIGNED VALUES, SUBMIT FINAL AIR BALANCE REPORTS TO ARCHITECT, ENGINEER AND TENANT'S REPRESENTATIVE. FINAL BALANCE REPORT MUST INDICATE AIR VALUES WITHIN 10% OF DESIGN, OR MUST STATE THE REASON THAT THE APPROPRIATE BALANCE COULD NOT BE ACHIEVED.

C. GENERAL CONTRACTOR SHALL REVIEW AIR BALANCE REPORT PRIOR TO SUBMISSION OF REPORT TO ENGINEER AND ARCHITECT. IF ENGINEER OR ARCHITECT REVIEW THE AIR BALANCE REPORT MULTIPLE TIMES DUE TO THE CONTRACTOR NOT FOLLOWING THESE GUIDELINES OR SENDING A PRELIMINARY REPORT FOR REVIEW IN LIEU OF THE FINAL REPORT, THE GENERAL CONTRACTOR WILL BE BACKCHARGED FOR ALL REVIEWS BEYOND THE FIRST.

D. VERIFY CONTROLS DURING BALANCING, INCLUDING HUMIDITY CONTROLS WHERE APPLICABLE.

E. AT THE COMPLETION OF THE PROJECT, THE GENERAL CONTRACTOR SHALL SUBMIT FINAL AIR/WATER BALANCE REPORT TO LANDLORD AND AUTHORITY HAVING JURISDICTION AS REQUIRED.

23 07 00 HVAC INSULATION

A. DUCT INSULATION AND APPURTENANCES SHALL HAVE A FLAME SPREAD RATING NOT EXCEEDING TWENTY-FIVE (25) AND A SMOKE DEVELOPED RATING NOT EXCEEDING FIFTY (50).

B. RECTANGULAR DUCTWORK CONCEALED FROM VIEW SHALL HAVE 1" THICK FIBERGLASS DUCT LINER LAMINATED AND PINNED TO DUCT WITH 1.0 PCF DENSITY AND R-VALUE OF 4.2 MIN. OWENS-CORNING COMMERCIAL GRADE FIBERGLASS DUCT LINER.

C. ROUND DUCTWORK CONCEALED FROM VIEW SHALL HAVE FLEXIBLE FIBERGLASS DUCT WRAP LAMINATED TO FOIL REINFORCED KRAFT VAPOR BARRIER FACING WITH 2" STAPLING FLANGE AND MIN. INSTALLED R-VALUE OF 4.2. OWENS-CORNING COMMERCIAL GRADE FIBERGLASS DUCT WRAP TYPE 100.

D. EXPOSED ROUND AND RECTANGULAR DUCTWORK SHALL HAVE NO INSULATION.

E. ALL DUCTWORK IN UNCONDITIONED SPACES SHALL HAVE INSULATION DUCT WRAP WITH A MINIMUM INSTALLED R-VALUE OF 5.0. CONDITIONED SPACES SHALL HAVE INSULATION DUCT WRAP WITH A MINIMUM INSTALLED R-VALUE OF 4.2.

F. INSULATION SHALL NOT BE APPLIED UNTIL THE GENERAL CONSTRUCTION HAS PROGRESSED SUFFICIENTLY TO INSURE AGAINST PHYSICAL OR MOISTURE DAMAGE TO THE INSULATION. ALL INSULATION DAMAGED THROUGH FAILURE TO OBSERVE THIS DIRECTIVE SHALL BE REPLACED AT THIS CONTRACTOR'S EXPENSE.

G. HANGER RODS MUST BE PERPENDICULAR TO DUCTWORK BEFORE INSULATION IS INSTALLED.

H. INSTALL ALL INSULATION ACCORDING TO MANUFACTURER'S RECOMMENDATIONS.

I. INSULATION SHALL BE APPLIED OVER FLANGES, JOINTS AND SEAMS IN PIPING AND DUCTWORK.

J. ALL JOINTS AND SEAMS IN INSULATION SHALL BE PROPERLY SEALED TO MAINTAIN VAPOR BARRIER INTEGRITY.

K. INSULATION SHALL BE OWENS-CORNING. EQUAL PRODUCT BY ARMSTRONG, CERTAINTEED, SCHULLER OR KNAUF MAY BE FURNISHED AT THE CONTRACTOR'S OPTION.

23 31 13 HVAC AIR DISTRIBUTION AND RETURN SYSTEMS

A. PROVIDE AND INSTALL DUCTWORK AND PLENUMS OF SIZE AND LOCATION AS SHOWN ON DRAWINGS. ALL DUCTS FOR AIR VELOCITIES LESS THAN 2000 FPM AND STATIC PRESSURE IN DUCT 2" OR LESS SHALL BE CONSTRUCTED OF GALVANIZED SHEET METAL. THE GAUGE OF STEEL USED IN ALL DUCTS SHALL BE AS FOLLOWS:

1. WHERE GREATER RECTANGULAR DIMENSION IS 12" OR LESS USE 26 GAUGE.
2. WHERE GREATER RECTANGULAR DIMENSION IS FROM 12" THROUGH 30" USE 24 GAUGE.
3. WHERE GREATER RECTANGULAR DIMENSION IS FROM 31" THROUGH 54" USE 22 GAUGE.
4. WHERE GREATER RECTANGULAR DIMENSION IS FROM 55" THROUGH 84" USE 20 GAUGE.

B. TRANSVERSE JOINTS AND BRACING TO CONFORM TO "HVAC DUCT CONSTRUCTION STANDARDS - METAL AND FLEXIBLE" (CURRENT SMACNA).

C. ALL DUCTS SHALL BE RIGID AND SHALL BE CROSS-BROKEN, PROPERLY STIFFENED WITH SUITABLE BRACES, TOES, OR ANGLES TO KEEP THEM TRUE TO SHAPE AND PREVENT BUCKLING. ALL VERTICAL DUCTS SHALL BE OF STRONG ENOUGH CONSTRUCTION TO CARRY 100 LBS. SUSPENDED LOAD FROM HANGERS WITHOUT BUCKLING. SOLDER ALL JOINTS WHERE NECESSARY TO INSURE TIGHT WORK. SEAMS OF ALL DUCTS AND JOINTS SHALL BE HAMMERED TO A SMOOTH SURFACE ON THE INSIDE.

D. CONSTRUCTION INCLUDING HANGERS AND SUPPORTING SYSTEMS OF ALL DUCTWORK SHALL ALSO BE IN ACCORDANCE WITH "HVAC DUCT CONSTRUCTION STANDARDS - METAL AND FLEXIBLE" (CURRENT SMACNA).

E. FLEXIBLE CONNECTIONS SHALL BE INSTALLED ON THE OUTLET AND INTAKE OF AIR HANDLING UNITS AND FANS. THESE CONNECTIONS SHALL BE AT LEAST 6" LONG, MADE OF NFPA 90A APPROVED FLAMEPROOF FABRIC.

F. FURNISH AND INSTALL VOLUME CONTROLLER AND EXTRACTOR AT ALL BRANCH TAKEOFFS IN SUPPLY AND RETURN FROM MAIN DUCTS TO ALL BRANCH DUCTS WHERE SHOWN. UNIT SHALL BE OF TWO GAUGES HEAVIER THAN THE DUCT.

G. PROVIDE MANUAL ADJUSTING LEVER FOR EACH UNIT. UNITS SHALL MOVE FROM FULL OPEN TO FULLY CLOSED POSITION TO CONTROL AIR DIRECTION AND VOLUME.

H. FURNISH AND INSTALL TURNING VANES IN ALL ELBOWS OF RECTANGULAR DUCTS. THE BLADES TO BE HOLLOW-FORMED DOUBLE THICKNESS VANES.

I. INSTALL SUPPLY AND RETURN REGISTERS, GRILLES AND DIFFUSERS AS SHOWN ON THE DRAWINGS AND SCHEDULE.

J. FLEXIBLE SUPPLY AIR DUCTWORK SHALL BE BY FLEXMASTER TYPE 1B OR EQUAL, WITH 1" THICK FIBERGLASS BLANKET INSULATION WITH METALIZED FILM VAPOR BARRIER OUTER JACKET. FLEXIBLE DUCT IN RETURN AIR PLENUM TO BE CLEARLY LABELED "CLASS 1" EVERY FOUR FEET. FLEXIBLE DUCT LENGTH MAY NOT EXCEED FIVE FEET. INSULATION SHALL HAVE MIN. INSTALLED R-VALUE OF 4.2.

K. METAL DUCTWORK - NO FIBERGLASS DUCT ALLOWED.

L. DUCT CONSTRUCTION SHALL BE AS FOLLOWS:

1. EXCEPT WHERE OTHERWISE INDICATED, CONSTRUCT ALL LOW PRESSURE DUCT IN ACCORDANCE WITH THE LATEST EDITION OF SMACNA STANDARDS WITH THE FOLLOWING PRESSURE CLASSIFICATIONS:
   a. SUPPLY DUCTS: 2" W.G. POSITIVE.
   b. RETURN AND EXHAUST DUCTS: 2" W.G. NEGATIVE.
2. SEAL ALL LOW PRESSURE DUCTS PER SMACNA CLASS B AND ALL MEDIUM PRESSURE DUCTS TO SMACNA CLASS A.
3. REGARDLESS OF ABOVE DUCT CONSTRUCTION AND SEALANT PRESSURE CLASSIFICATIONS, MAXIMUM DUCT AIR LEAKAGE WILL NOT EXCEED 5% AS REQUIRED FOR FINAL AIR BALANCE APPROVAL.

M. ROUND DUCTWORK SHALL BE GALVANIZED STEEL WITH SPIRAL LOCK SEAM CONSTRUCTION FOR ALL SIZES 12" DIAMETER AND LARGER. ROUND DUCTWORK SIZES 10" DIAMETER AND SMALLER MAY BE SNAP-LOCK CONSTRUCTION. ALL SNAP-LOCK SEAMS SHALL BE SEALED AS DESCRIBED IN THESE SPECIFICATIONS. ROUND FITTINGS SHALL BE GALVANIZED STEEL WITH SPOT WELDED AND BONDED CONSTRUCTION. DUCTWORK SHALL BE AS MANUFACTURED BY UNITED MCGILL, SEMCO, OR APPROVED EQUAL.

N. ALL JOINTS AND SEAMS SHALL BE SEALED WITH 2" WIDE, GLASS- FIBER FABRIC REINFORCED TAPE. JOINTS ALSO SHALL BE RIVETED OR CONNECTED WITH SHEET METAL SCREWS. LIQUID SEALANTS BY UNITED MCGILL CORP., DOW CORNING, MIRACLE ADHESIVES AND SUREBOND INC. WILL BE ACCEPTED IN LIEU OF TAPE.

O. DUCT TRANSITIONS SHALL NOT EXCEED 30 DEGREES SLOPE EXCEPT AS SPECIFICALLY NOTED OTHERWISE.

23 33 00 DAMPERS

A. RECTANGULAR DUCT GALVANIZED STEEL MANUAL BALANCE AND MOTORIZED DAMPER 6" WIDE 16 GAUGE OPPOSED BLADES, CHANNEL FRAME WITH BRACED CORNERS, CONCEALED LINKAGE, TEFLON FILLED BEARINGS, 3/8" DIAMETER AXLE, 6" LONG CONTROL SHAFT. MOTORIZED DAMPER TO HAVE REPLACEABLE BUTYL RUBBER SEALS INSTALLED ALONG THE TOP, BOTTOM AND SIDES OF THE FRAME, AS WELL AS, ALONG ALL SIDES OF EACH BLADE.

B. ROUND GALVANIZED STEEL MANUAL BALANCE DAMPER WITH SINGLE 16 GAUGE BLADE, CHANNEL FRAME, STAINLESS STEEL SLEEVE BEARINGS PRESSED INTO FRAME, 3/8" DIAMETER AXLE EXTENDED 6" FOR CONTROL SHAFT, BLADE STOP.

C. EQUIP DAMPERS WITH LOCKING QUADRANTS.

D. INSTALL BALANCE DAMPERS WHERE SHOWN ON THE DRAWINGS AND ELSEWHERE AS NECESSARY TO OBTAIN PROPER SYSTEM BALANCE.

E. CHECK DAMPERS FOR PROPER OPERATION BEFORE AND AFTER INSTALLATION.

F. DAMPERS SHALL BE GREENHECK OR EQUAL BY RUSKIN, AMERICAN WARMING AND VENTILATING, LOUVERS AND DAMPERS, OR PREFCO MAY BE FURNISHED AT THE CONTRACTOR'S OPTION.

1

G. FIRE DAMPERS SHALL BE FURNISHED WITH INTERLOCKING HINGED BLADES. ALL DAMPERS SHALL BE UL APPROVED AND LABELED AND SHALL MEET ALL REQUIREMENTS OF NFPA NO. 90A. FURNISH WITH UL LABELED FUSIBLE LINKS WITH TEMPERATURE RANGES TO CONFORM TO NFPA REQUIREMENTS.

H. ALL FIRE DAMPERS SHALL BE TYPE "B" WITH BLADES OUT OF THE AIRSTREAM AND RATED FOR USE IN DYNAMIC SYSTEMS.

23 37 13 AIR DISTRIBUTION DEVICES

A. SQUARE CEILING SUPPLY AIR DIFFUSER - STEEL SQUARE CEILING DIFFUSER, REMOVABLE PLAQUE FACE PANEL, ROUND NECK, TITUS MODEL OMNI.

B. SQUARE CEILING RETURN AIR REGISTER - STEEL SQUARE CEILING DIFFUSER, REMOVABLE PLAQUE FACE PANEL, ROUND NECK, TITUS MODEL OMNI.

C. LINEAR SLOT SUPPLY AIR DIFFUSER - ALUMINUM LINEAR SLOT DIFFUSER. PROVIDE WITH INSULATED PLENUM, TITUS MODEL ML-39.

D. SUPPLY AIR GRILLE - STEEL DOUBLE DEFLECTION SUPPLY GRILLE, 3/4" BLADE SPACING, FRONT BLADES PARALLEL TO THE SHORT DIMENSION, TITUS MODEL 300 RS.

E. RETURN AIR GRILLE - STEEL RETURN AIR GRILLE, 1/2" BLADE SPACING WITH 35° FIXED DEFLECTION BLADES, FRONT BLADES PARALLEL TO THE SHORT DIMENSION, TITUS MODEL 355RL.

F. FINISHES - FURNISH ALL AIR DISTRIBUTION DEVICES WITH PRIME COATED AND WHITE BAKED ENAMEL FINISH COAT UNLESS SPECIFIED OTHERWISE.

G. COORDINATE AIR DISTRIBUTION DEVICE LOCATIONS WITH ALL AFFECTED CONTRACTORS BEFORE INSTALLING DUCTWORK. SIGNIFICANT DEVIATIONS IN LOCATIONS FROM THOSE SHOWN ON THE DRAWINGS MUST BE APPROVED BY ARCHITECT BEFORE INSTALLATION.

H. SUSPEND CEILING AIR DEVICES FROM STRUCTURE ON WIRE HANGERS OR FROM RIGID DUCTWORK. CEILING MUST NOT BE USED TO SUPPORT AIR DISTRIBUTION DEVICES.

I. SECURELY FASTEN SIDE WALL AIR DEVICES TO RIGID DUCTWORK OR STRUCTURE.

J. AIR DISTRIBUTION DEVICES FURNISHED AND INSTALLED BY THE GENERAL CONTRACTOR SHALL BE TITUS OR EQUALS BY PRICE, KRUEGER OR NAILOR MEETING REQUIREMENTS ON SHOWN ON SHEET M2.0.

(END OF MECHANICAL SPECIFICATIONS)

PROFESSIONAL CERTIFICATION. I HEREBY CERTIFY THAT THESE DOCUMENTS WERE PREPARED OR APPROVED BY ME, AND THAT I AM A DULY LICENSED PROFESSIONAL ENGINEER UNDER THE LAWS OF THE STATE OF MARYLAND, LICENSE NO. 32448, EXPIRATION DATE: 02-07-2020 .

A

OWNER:

5A LANDS' END LANE
DODGEVILLE, WI 53595

ARCHITECT / ENGINEER:

SHREMSHOCK
Shremshock Engineering, Inc.
7400 W. Campus Rd. Suite 150 New Albany, OH 43054
t: 614 545 4550 | f: 614 545 4555 | shremshock.com

©2019 THE ARCHITECT / ENGINEER ASSUMES NO RESPONSIBILITY OR LIABILITY FOR THE USE OF THESE PLANS FOR ANY PROJECT OTHER THAN SPECIFICALLY AUTHORIZED BY THEM AND SIGNED AND SEALED FOR SUCH SPECIFIC LOCATION IN THE STATE, PROVINCE OR TERRITORY SHOWN ON THE SEAL. THIS BUILDING USE IS ONLY APPLICABLE IN AREAS MEETING THE STATED DESIGN CRITERIA.

LANDS' END

STORE NO:
TBD

PROJECT LOCATION:
CONGRESSIONAL PLAZA
1667 ROCKVILLE PIKE
SPACE #06
ROCKVILLE, MD 20852

DESIGN TYPE:
-

REVISIONS:

REQUIRED BY:		DATE
1	KLM CLIENT, LANDLORD & B.D. COMMENTS	07/19/2019

* INDICATES NO REVISION TO THIS SHEET

MECHANICAL SPECIFICATIONS

DRAWN BY: JB
CHECKED BY: JAE

DATE ISSUED: 06/07/2019
PROJECT NO: 190148
DRAWING NO:
M4.0